SOLAR

DISTRIBUTION SOLUTIONS

YUEQING FEEO ELECTRIC CO.,LTD.

A : Liushi, Yueqing, Zhejiang, China, 325604
T : +86-577-61800010
E : info@feeo.com.cn
W : www.feeo.com.cn

www.feeo.com.cn

FEEO

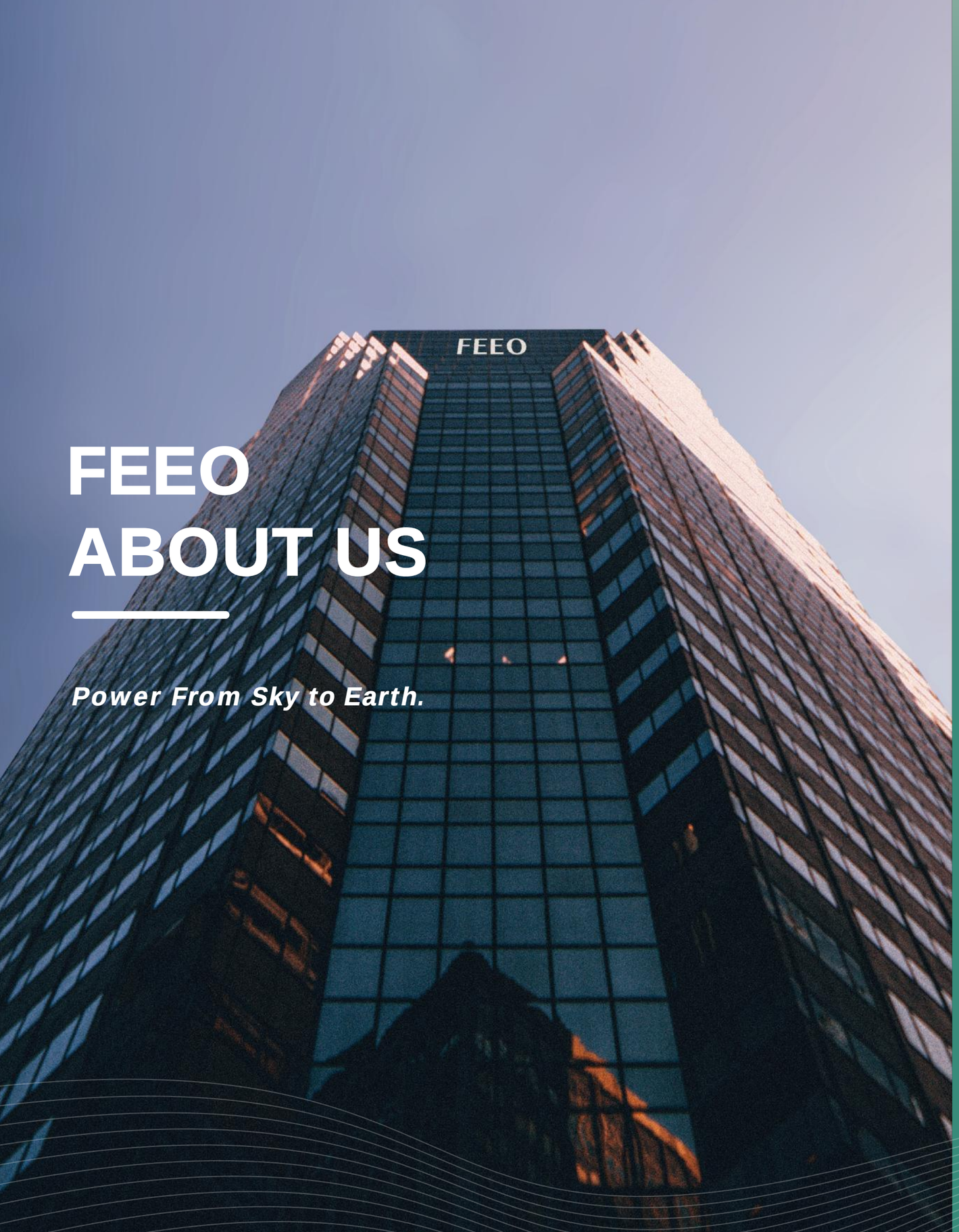

FEEO ABOUT US

Power From Sky to Earth.

YUEQING FEEO ELECTRIC CO.,LTD which is owned by ZHEJIANG SULE ENERGY CO.,LTD is a professional solar PV electric components manufacturer located in Yueqing City, China. We're specialized in DC circuit breakers, Surge Protective Devices, PV fuses, isolator switches, MC4 connectors etc.With CE,RoHS,CB,TUV certificates and authorized dealers in Korea, Philippines, Thailand, India, Poland, Russia etc. we can assure you perfect quality and excellent service.

We're looking forward to having a good-long term cooperaton with you and your company.

PRESENT AND FUTURE

We're specialized in DC circuit breakers, Surge Protective Devices, PV fuses, isolator switches, MC4 connectors etc. With CE,RoHS,CB,TUV certificates and authorized dealers in Korea, Philippines, Thailand, India, Poland, Russia etc. There will be more areas in the future.

CERTIFICATE

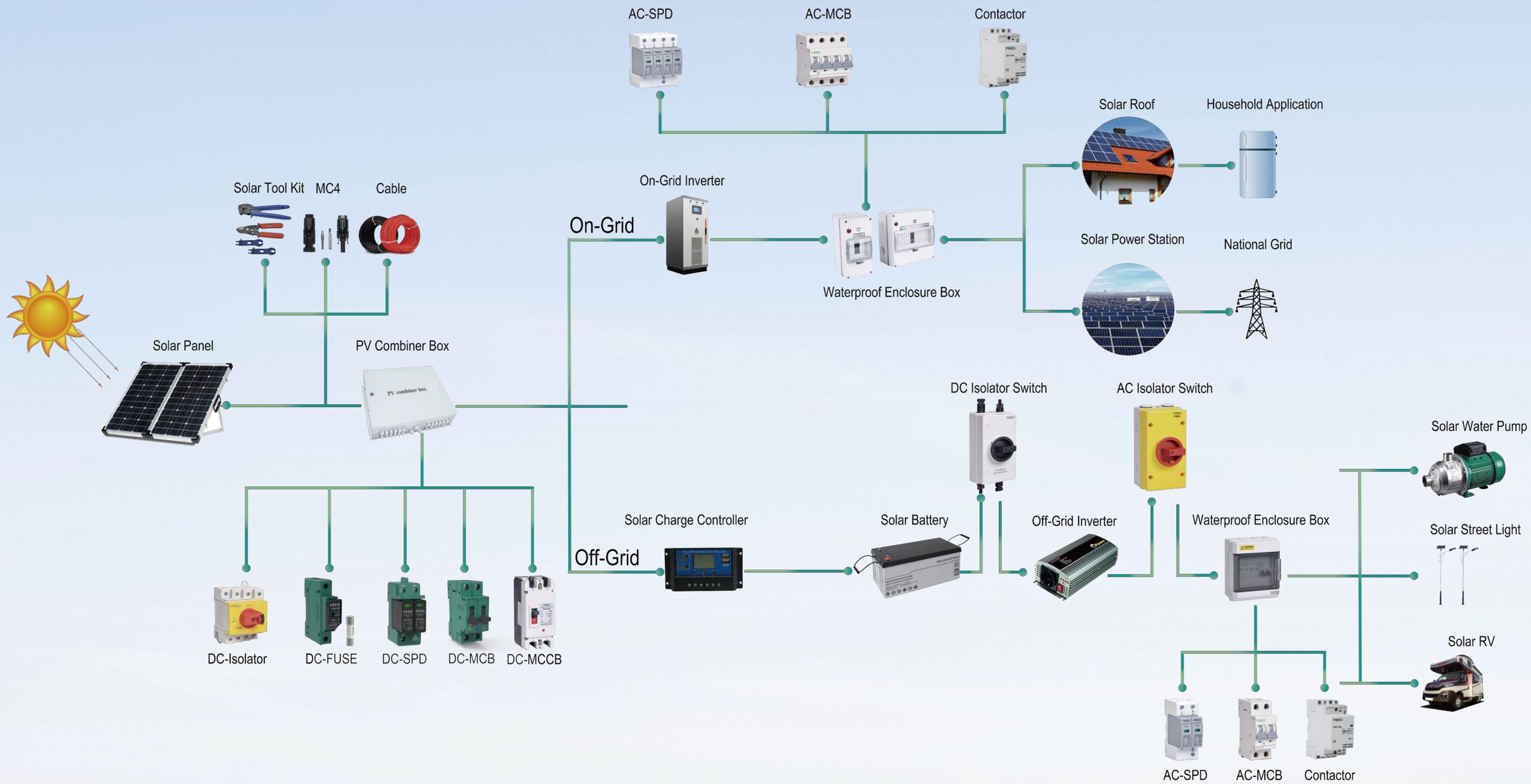
AC-SPD
AC-MCB
Contactor
Solar Roof
Household Application
On-Grid Inverter
On-Grid
Waterproof Enclosure Box
Solar Power Station
National Grid
Solar Tool Kit
MC4
Cable
Solar Panel
PV Combiner Box
DC Isolator Switch
AC Isolator Switch
Solar Water Pump
Solar Charge Controller
Solar Battery
Off-Grid Inverter
Waterproof Enclosure Box
Solar Street Light
Off-Grid
Solar RV
DC-Isolator
DC-FUSE
DC-SPD
DC-MCB
DC-MCCB
AC-SPD
AC-MCB
Contactor

PHOTOVOLTAIC SOLUTIONS

ROOF-TOP SOLUTION

LOCATION: INCHEON,KOREA

POWER STATION

SOLUTION LOCATION: INDONESIA

HOME BACKUP POWER

SOLUTION LOCATION: PHILIPPINES

FEEO CONTENTS

DC Series

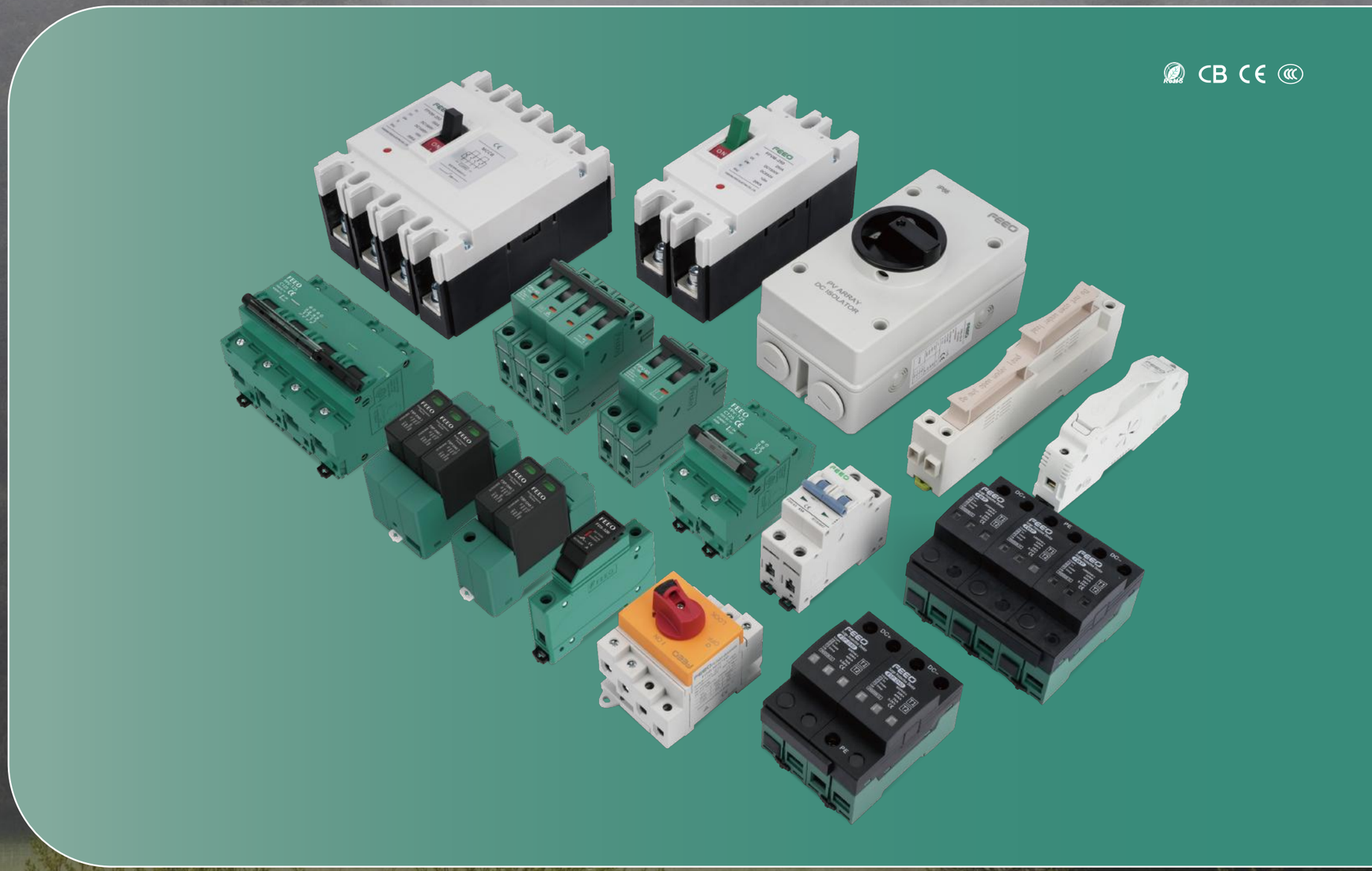

FEEO

FPV-63

Solar DC Mini Circuit Breaker (DC MCB)

FPV-63 DC MCB supplementary protectors are designed to provide overcurrent protection within appliances or electrical equipment, where a branch circuit protection is already provided or not required. Devices are designed for direct current (DC) control circuit applications.

Specifications

FPV-63 Series Circuit Breaker		FPV-63			
Frame Degree Rated Current (A)		63			
Pole		1P	2P	3P	4P
Rated Operating Voltage (V DC)		250	550/800	750	1000/1200/1500
Rated Insulation Voltage Ui (V DC)		1200V			
Rated Current In (A)		3, 6, 10, 16, 20, 25, 32, 40, 50, 63A			
Rated Impact Voltage Uimp (kV)		4			
Ultimate Breaking Capacity Icu (kA)		6			
Run Breaking Capacity Ics (%Icu)		100%			
Curve Type		C			
Trip Type		Thermal-magnetic			
Mechanical	Actual average value	7800			
	Standard value	7800			
Electric	Actual average value	200			
	Standard value	300 (accord to TUV standard)			

Control and Indication

Shunt release (SHT)	Option
Undervoltage release (UNT)	
Auxiliary contact (AX)	
Alarm contact (AL)	

Condition and Installation

Wiring capacity (mm2)		In ≤ 32A, 1-6, I ≥ 40A, 10~16			
Ambient temperature (℃)		40			
Altitude		≤ 2000			
Relative humidity		≤ 95%			
Pollution Level		3			
Installation Environment		No obvious shock and vibration			
Installation category		Class III			
Installation		DIN Standard rail			
Dimensions (W)x(H)x(Deep)	W	18	36	54	72
	H	80	80	80	80
	Deep	71	71	71	71
Weight (kg)		0.12	0.24	0.36	0.48

Connection

Wiring capacity (mm2)	1P	2P	3P	4P
Connection	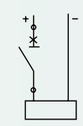	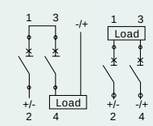	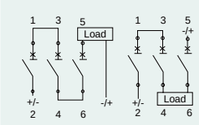	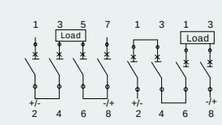

Over current tripping characteristic

Test	Test Current	Initial State	Limited Time	Expected Result	Remarks
a	1.05In	Cold state	t > 1h	Non-tripping	
b	1.3In	Right after test number a	t < 1h	Tripping	The current is rising within 5s
c	7In	Cold state	t ≤ s	Non-tripping	
d	10In	Cold state	t < 0.1s	Tripping	

Current correction values used at different ambient temperatures

Temperature / Fixed current (A) / Rated Current (A)	-35	-30	-20	-10	0	10	20	30	40	50	60	70
3A	3.9	3.78	3.69	3.57	3.42	3.3	3.12	3	2.88	2.79	2.64	2.49
6A	7.8	7.56	7.38	7.14	6.84	6.6	6.24	6	5.76	5.64	5.28	4.98
10A	13.2	12.7	12.5	12	11.5	11.1	10.6	10	9.6	9.3	8.9	8.4
16A	21.12	20.48	20	19.2	18.4	17.76	16.96	16	15.36	14.88	14.24	13.44
20A	26.4	26.4	25	24	23	22.2	21.2	20	19.2	18.6	17.8	16.8
25A	33	32	31.25	30	28.75	27.75	26.5	25	24	23.25	22.25	21
32A	42.56	41.28	40	38.72	37.12	35.52	33.93	32	30.72	29.76	28.16	26.88
40A	53.2	51.2	50	48	46.4	44.8	42.4	40	38.4	37.2	35.56	33.6
50A	67	65.5	63	60.5	58	56	53	50	48	46.5	44	41.5
63A	83.79	81.9	80.01	76.86	73.71	70.56	66.78	63	60.48	58.9	55.44	52.29

Current correction factor used at different altitudes

Rated Current (A)	Different altitude correction factors		
	≤ 2000m	2000~3000m	≥ 3000m
3,6,10,16,20,25,32,40,50,63A	1.0	0.9	0.8

Current correction factor used at different altitudes

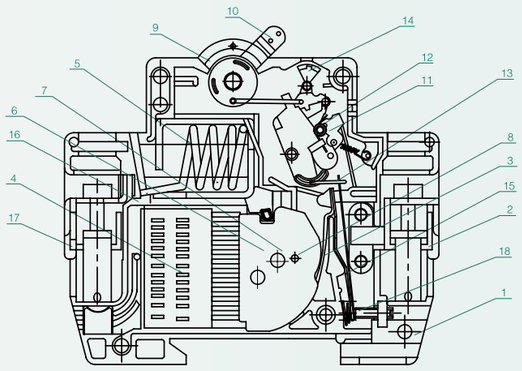

1. Shell
2. Wiring board
3. Static contact
4. Arc chamber
5. Copper coil
6. Insulation plate
7. Moving contact
8. Fixed contact
9. Spring
10. Handle
11. Lock catch knuckle
12. Tripping chain
13. Jump pin
14. Indicator
15. Bimetal
16. Soft linking
17. Wiring board
18. Adjusting screw

Wire connection terminals

Rated current In (A)	Copper wire nominal cross sectional area (mm²)
3,6	1
10	1.5
16,20	2.5
25	4
32	6
40,50	10
63	16

Current correction factor used at different altitudes

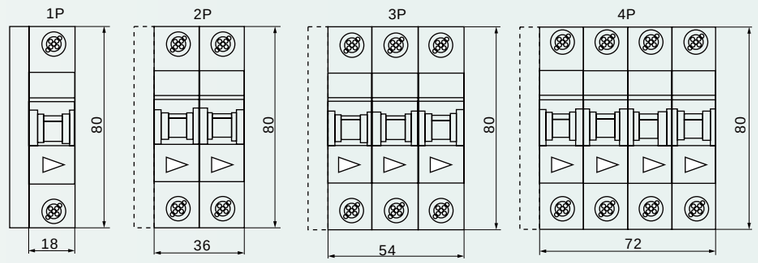

Characteristic Curve

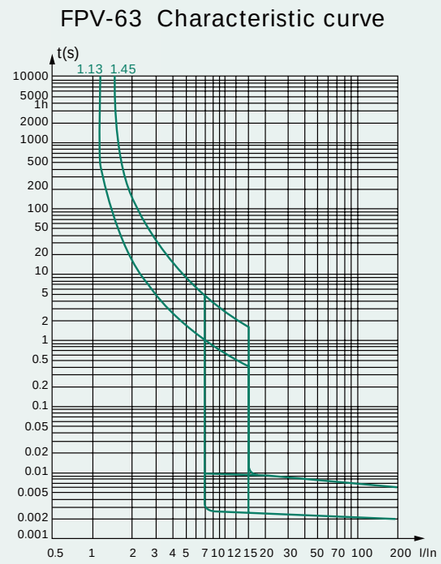

FEEO

FPV-125

Solar DC Mini Circuit Breaker (DC MCB)

FPV-125 high breaking capacity circuit breaker is specially for solar PV system. The current is form 63A to 125A and voltage up to 1500VDC. Standard according to IEC/EN60947-2.

Specifications

Rated Current	63,80,100,125A			
Rated Voltage (V DC)	250	550/800	750	1000/1200/1500
No. of Pole	1P	2P	3P	4P
Mechanical Life	7800 times (C.O.)			
Electrical Life	20000 times			
Icu	10KA			
Ics	10KA			
Weight(G)	150	300	460	620

Characteristic Curve

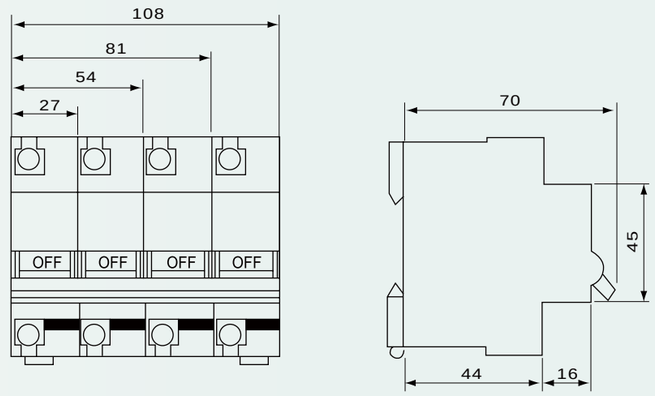

Installation

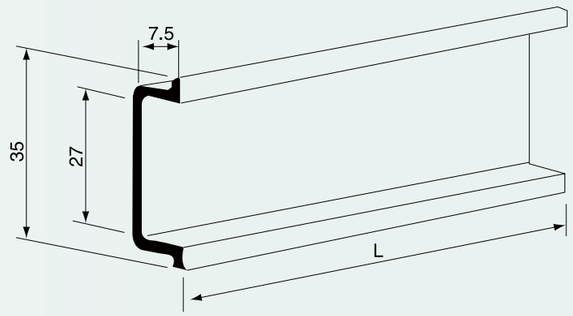

Over current tripping characteristic

Test	Rated Current (A)	Initial State	Test Current	Limited Time	Prospective Result	Starting State
a	In = 63	Cold state	1.05In	t ≤ 1h	Non-tripping	
	In > 63	Cold state	1.05In	t ≤ 2h	Non-tripping	
c	In = 63	Hot state	1.3In	t < 1h	Tripping	The current rise steadily to a fixed value within 5s
	In > 63	Hot state	1.3In	t < 2h	Tripping	
d	In ≥ 63	Cold state	8In	t ≤ 0.5s	Non-tripping	
			12In	t < 0.2s	Tripping	

Current correction values used at different ambient temperatures

Temperature / Fixed current(A) / Rated Current (A)	-35	-30	-20	-10	0	10	20	30	40	50	60	70
63A	90.4	88.52	84.75	80.33	76.55	72.45	67.73	63	57.65	51.98	46.31	40.95
80A	114.8	112	106.8	101.6	96.4	90.8	85.6	80	74	67.6	60.4	53.2
100A	143.5	140.5	134.5	127.5	121	113.5	107.5	100	92.5	84.5	75.5	66.5
125A	178.75	173.75	164.38	156.25	148.75	140.63	135	125	116.25	107.5	97.5	85

Current correction factor used at different altitudes

Rated Current (A)	Different altitude correction factors		
	≤ 2000m	2000~3000m	≥ 3000m
80,100,125A	1.0	0.9	0.8

Characteristic Curve

FPV-125 Characteristic curve

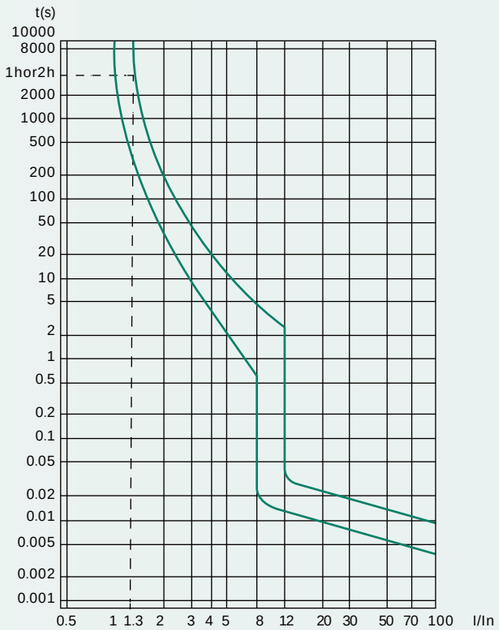

FEEO

FRD1-63

Residual Current Circuit Breaker

Leakage protection; Suitable for industrial, commercial, high-rise andcivil residential and other occasions. The product ensures reliable action for sinusoidal ac residual current, pulsed dc residual current, ac residual sinusoidal current (up to 1000Hz),pulsed dc residual current, and smooth dc residual current (whether applied suddenly or slowly increasing).

Technical Data

Standard	IEC/EN61008-1, IEC62423
Protection	Ground fault
Type of trip	Electro-magnetic
Type of protection (electric leakage)	B
No.of poles	2P(1P+N), 4P(3P+N)
Rated currents (In)	63A
Rated sensitivity current I△n	30mA
Residual current off-time under I△n	≤ 0.1s
Rated residual making and breaking capacity (I△m)	500A(In ≤50A), 10In(In ＞50A)
Rated voltage (Ue)	1P+N: 230/240V~, 3P+N: 400/415V~
Rated frequency	50/60Hz

Technical Data

Rated breaking capacity	10,000A
SCPD fuse	10000
Rated impulse withstandard voltage (1.5/50) Uimp	4,000V
Dielectric test voltage at Ind. Freq.for 1 min	2.5kV
Electrical life	2,000 Cycles
Mechanical life	4,000 Cycles
Contact position indicator	Yes
Protection degree	IP20
Ambient temperature	-25℃ to+40℃, Max.95% humidity
Terminal connection type	Cable / Pin-type busbar / U-type busbar
Max. terminal size for cable	25mm²
Max. tightening torque	2.5 N.m
Installation	Mounting on 35mm DIN rail
Connection	From top and bottom
Rated operational voltage Un	240/415V
Nominal insulation voltage Ui	500V
Rated residual non-action current I△no	0.5mA I△n
Rated residual action current I△n	30mA
Direct current flow as sensitivity I△ndc	0.5~2mA I△n
1min dielectric voltage	2000V
Rated limit short circuit current Inc	6A,10A
Rated limit remaining short circuit current I△c	6A,10A
Rated on and off capacity Im	500A(25A,40A) or 10In(≥63A)
Rated residual switching and breaking capacity I△m	500A(25A,40A) or 10In(≥63A)

Detect Waveform And Protection Range

Detection of waveform	Waveform	Different waveform action range
Sine AC		0.5~I△n
Pulsating DC		0.35~1.4I△n
High frequency (up to 1kHz)		150Hz，0.5~2.4 I△n
		400Hz，0.5~6 I△n
		1000Hz，1~14 I△n
Two phase full wave rectification		0.5~2 I△n
Three-phase full-wave rectifier		0.5~2 I△n
Smooth direct current		0.5~2 I△n

Product Features

- Standard:IEC62423、IEC61008.1、GB22794、GB16916.1
- Double sink flow bar wiring function
- With leakage fault indication
- Maximum Wiring Capacity35mm2

Residual Leakage Current Breaking Time

Rated current In	Rated residual action current I△n	Residual current breaking time		
		I△n	2 I△n	5 I△n
16,25,40,63A	30,100,300mA	0.1s	0.08s	0.04s

Outline Overall And Installing Dimensions

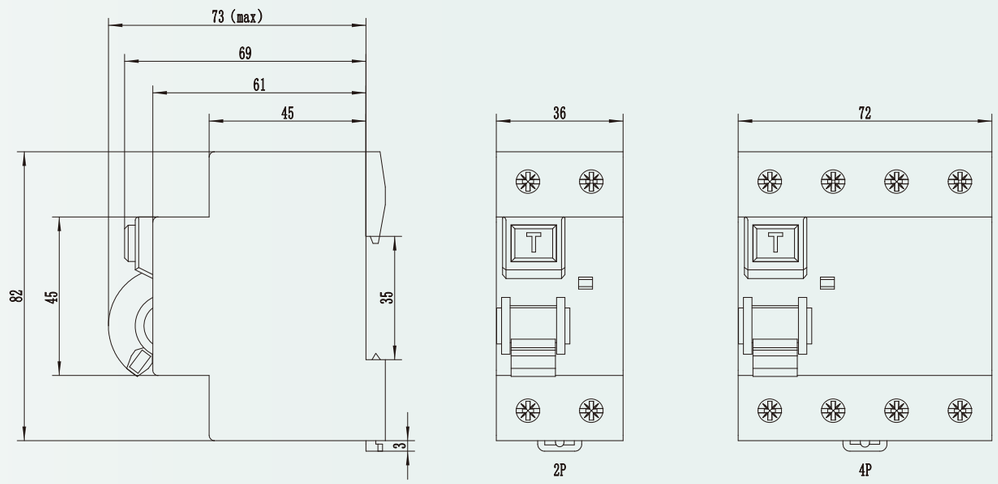

FEEO

FPVM

Solar DC Moulded Case Circuit Breaker (DC MCCB)

FPVM series Moulded Case Circuit Breaker is designed to distribute power and protect the circuit and power equipment against overload in solar system. It is apply to rating current 1250A or less, direct current rating voltage 1500V or less. Products according IEC60947-2, GB14048.2 standard.

Specifications

Model		FPVM-125	FPVM-250	FPVM-400	FPVM-630	FPVM-800	FPVM-1250
Rated Current In (A)		16, 20, 25 32, 40, 50, 63 80, 100, 125	100, 125 140, 160, 180 200, 225, 250	250, 315 350, 400	400 500 630	630 700 800	800 1000 1250
Rated Operating Voltage Ue (V) DC		1P:250V 2P:550V 3P:750V 4P:1000/1500V	2P:550V 3P:750V 4P:1000V 4P:1500V	3P:750V 4P:1000V 4P:1200V 4P:1500V	3P:750V 4P:1000V 4P:1200V 4P:1500V	3P:750V 4P:1000V 4P:1200V 4P:1500V	3P:750V 4P:1000V 4P:1200V 4P:1500V
Rated Insulation Voltage Ui (V)		1500					
Uimp (kV)		8kV					
Mechanical Life	Times	7000	7000	4000	4000	2500	2000
Electrical Life	Times	2000	2000	1000	1000	800	600
Breaking Times (ms)		200					
Installation Location		Any place					
Isolator Capacity		Yes					
Standard		IEC 60947-2, IEC60947-1, GB 14048.1, GB 14048.2					
Temperature (℃)		-25℃ ~+50℃					
Protection Degree		IP20					
Accessory		OF/SD/MX					
Arcing Distance (mm)		≥ 50					

Application conditions

- Altitude : less than 2000m (please specify when it's higher than 2000m).
- Ambient temperature : -40~+70℃
- Dampproof Moisture-resistant

Connection

Wiring capacity (mm2)	2P	3P	4P
Connection	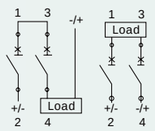	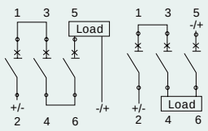	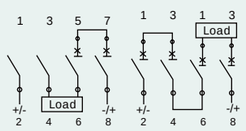

Current correction factor used at different altitudes

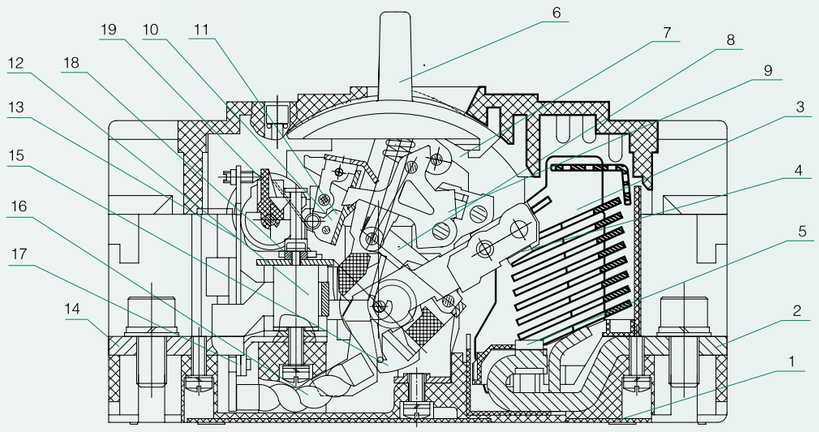

1.Shell
2.Up wiring board
3.Arc chamber
4.Moving contact
5.Fixed contact
6.Handle
7.Lever
8.Connecting lever
9.Jump pin
10.Chain part
11.Chain part
12.Release
13.Bimetal
14.Down wiring board
15.Spindles
16.Soft linking
17.Thermoelement
18.Upper putt
19.Short time delay institutions

FEEO

FSP-D40

Type2 Solar DC Surge Protective Device (DC SPD)

Surge protective device, protect against lightning surge voltages in solar system (photovoltaic power supply system). These units must be installed in parallel on the dc networks to be protected and provide common and different modes protection. Its installed location are recommended at both ends of the dc power supply line (solar panel side and inverter/converter side), especially if the line routing is external and long.

Specifications

FPV-D40 Surge protector	FSP-D40			
PVDC - specific	EN61643-31			
Pole	2P	2P	3P	3P
Electrical parameter				
Classified test	Ⅱ	Ⅱ	Ⅱ	Ⅱ
Uoc max (VDC)	600	800	1000	1500
Uc (VDC)	600	600	1000	1500
In (8/20) us (kA)	20	20	20	20
Imax (8/20) us (kA)	40	40	40	40
Up (kV)	2.0	2.5	3.8	5.3
Icpv	20uA			

Remote Signal Contact

Remote signal contact	Maximum working voltage (V)	250VAC/30VDC	250VAC/30VDC
	Maximum working current (A)	IA (250V/AC)	IA (250V/AC)
	IA (30V DC)	IA (30V/AC)	IA (30V/AC)

Installation and Dimensions

Wiring capacity (mm2)	Hard wire	4~25	4~25
	Flexible wire	4~16	4~16
Stripping length (mm)		10	10
Terminals crcwa		M5	M5
Torque (Nm)	Main circuit	3.5	3.5
	Remote signal contact	0.25	0.25
Protection class	All profile	IP40	IP40
	Connection port	IP20	IP20
Installation environment		No obvious shock and vibration	
Altitude (m)		≤2000	≤2000
Working Temperature		-30℃ ~ +70℃	-30℃ ~ +70℃
Relative humidity		30%~90 %	30%~90 %
How to install		Installed with H 35-7.5/DIN35 steel mounting rail	
Size (mm) (W x H x L)	W	36	54
	H	90	90
	L	67.6	67.6
Weight (kg)		0.24	0.36

Dimensions

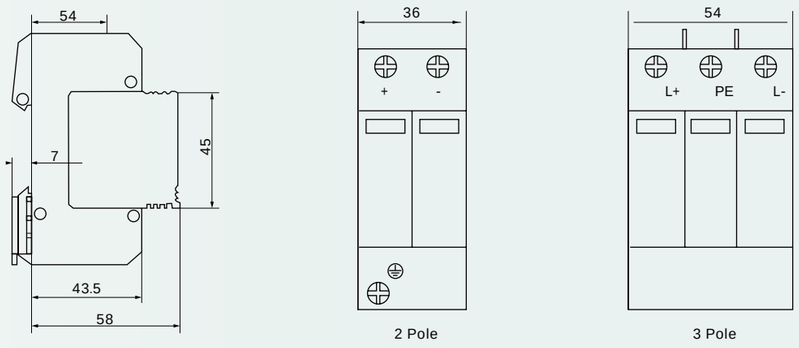

Drawing

DC 550V

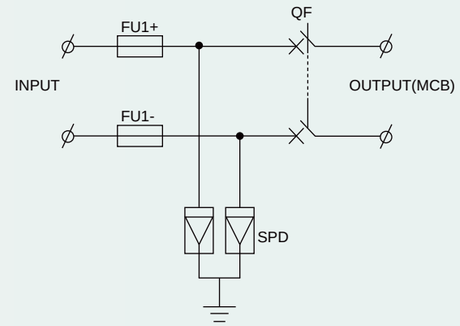

DC 1000V

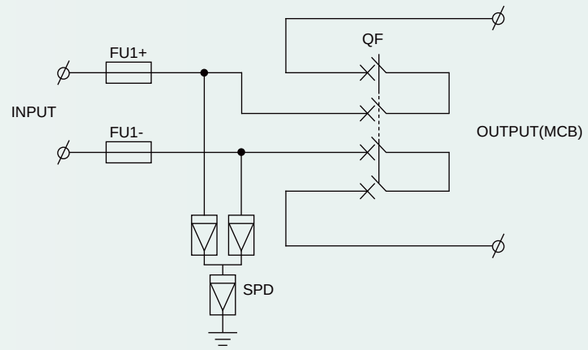

FEEO

FSP-D40

Type 1+2 DC Surge Protective Device

FSP-D40 is a Type 1+2 surge protector specially designed for photovoltaic power generation, it is installed at the outlet of photovoltaic panels with high risk of direct lightning strike, it is suitable for photovoltaic system protection with DC voltages of 1000V and 1500V.

Features

- Type 1+2 surge protective device for Photovoltaic
- VG-Technology
- Up to 1500 Vdc
- No leakage, no operating currents
- Impulse currents Iimp/Itotal : 5/20μs & 10/350 us
- Common and Differential Mode protection
- Plug-in modules
- Remote Signaling (option)
- EN 61643-31 compliance

Specifications

Model		FSP-D40		
Description		63		
Pole		2P	3P	3P
Protection mode		CM/DM		
Max. operating voltage	Ucpv	600Vdc	1000Vdc	1500Vdc
Current withstand short-circuit	Iscpv	1000A		
Operating current - to the voltage Ucpv	Icpv	none		
Leakage current - to the voltage Ucpv	Ipe	none		

Specifications

Model		FSP-D40		
Follow current	If	none		
Nominal discharge current - 8/20 us	In	20KA		
Max discharge current by pole - 8/20 us	Imax	40KA		
Max. Lightning current by pole - 10/350 us	Iimp	7KA		
Total lightning current - 10/350 us	Itotal	10KA		
Total Maximal discharge current - 8/20 us	Itota	60KA		
Protection level CM/DM (at In)	Up	2.8KV	3.5KV	5.1KV
Mechanical characteristics				
Dimensions		See diagram		
Connection		Screw terminal for 2.5-25 mm2 wire		
Disconnection indic ator		1 mechanical indicator by pole		
Remote signaling		Option FSP-D40 - Output on changeover contact		
Mounting		Symmetrical rail 35mm (EN60715)		
Operating temperature		-40℃ ~ +85℃		
Protection class		IP20		
Housing material		Thermoplastic UL94-V0		

Dimensions

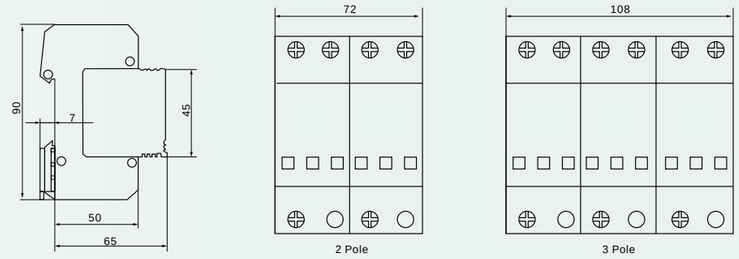

FEEO

FDS-32

Solar DC FUSE

A range of 10x38mm fuse links specifically designed for protecting photovoltaic strings. These fuse links are capable of interrupting low overcurrents associated with faulted photovoltaic string arrays (reverse current, multi-array fault).

Structural Characteristics

- According to EN60269-1
- Rated current: 1-32A
- Rated voltage: DC 1000V
- Rated breaking capacity:DC 20KA
- Operating class gPV for Solar protection

Specifications

Model	FDS-32
Pole	1P
Rated Voltage Ue (V DC)	1000
Rated Current In (A)	1,2,3,4,5,6,8,10,12,15,20,25,30,32
Biggest Block Ability (KA)	20
The Most High Power Consumption (W)	3.5

Connection and Installation

Connection (mm2)	2.5-10
Working Temperature	-30℃ ~ +70℃
Resistance And Damp Hot	Class 2
Altitude (m)	≤ 2000
Relative Humidity	≤ 95%
Protection Class/Degree	IP20
Pollution	3
Installation Environment	No obvious shock and vibration
Installation Class/Type	Class III/DIN rail

Size (mm)

Size/Dimension(mm)		
WxHxL	W	18
	H	60
	L	78
Fuse Size		10×38
Fuse Link Weight(kg)		0.011
Fuse holder weight(kg)		0.07

Structural Characteristics

- Photovoltaic system fuse accord with EN 60269-1:2007+A1+A2.
- Photovoltaic battery dc fuse designed to used for photovoltaic (PV) system.
- Main effect is to protect the solar panels. Solar panels points in effective condition is broken.
- Fault light cells break points at the same time, does not affect other normal work of light from the stack.
- Technical Data Rated coltage: DC1000V
- Breaking capacity: 20KA
- Function level: PV.

Dimensions

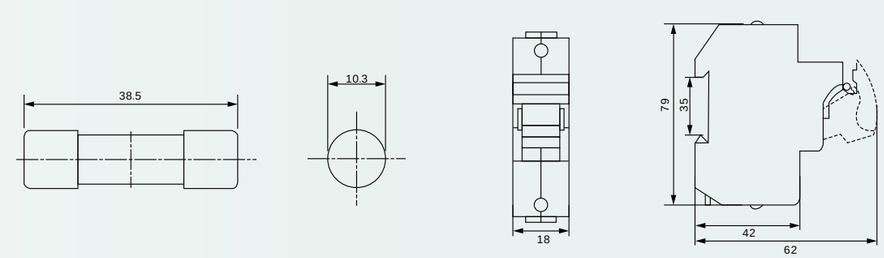

Installation

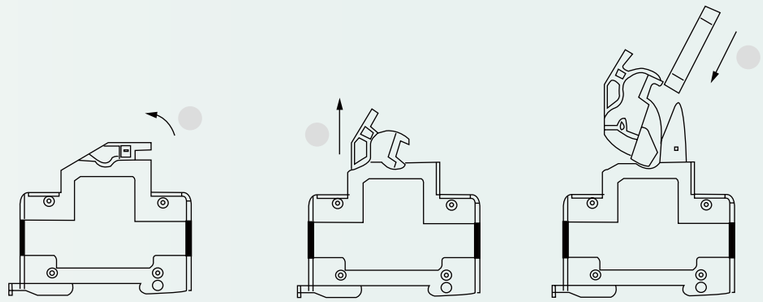

Characteristic Curve

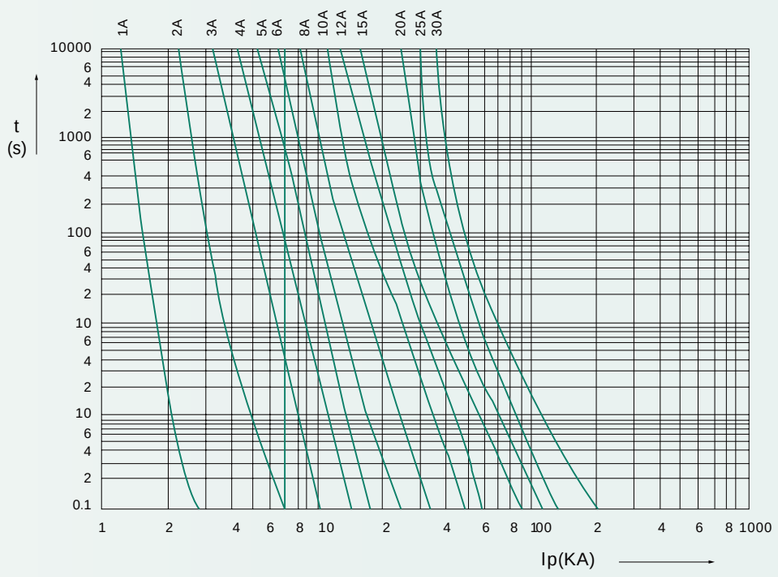

FEEO

FDS-63

Solar DC FUSE

A range of 14x51mm fuse links specifically designed for protecting photovoltaic strings. These fuse links are capable of interrupting low overcurrents associated with faulted photovoltaic string arrays (reverse current, multi-array fault).

Structural Characteristics

- According to EN60269-6
- Rated current: 1-63A
- Rated voltage: DC 1000V
- Operating class gPV for Solar protection

Specifications

Model	FDS-63
Pole	1P
Rated Voltage Ue (V DC)	1000
Rated Current In (A)	32,40,50,63

Connection and Installation

Connection (mm2)	2.5-10
Working Temperature	-30℃ ~ +70℃
Resistance And Damp Hot	Class 2
Altitude (m)	≤ 2000
Relative Humidity	≤ 95%
Protection Class/Degree	IP20
Pollution	3
Installation Environment	No obvious shock and vibration
Installation Class/Type	Class III/DIN rail

Size (mm)

Size/Dimension(mm)		
WxHxL	W	22
	H	66
	L	96
Fuse Size		14×51
Fuse Link Weight(kg)		0.011
Fuse holder weight(kg)		0.025

PV Fuse Description

- Photovoltaic system fuse accord with EN 60269-1:2007+A1+A2.
- Photovoltaic battery dc fuse designed to used for photovoltaic (PV) system.
- Main effect is to protect the solar panels. Solar panels points in effective condition is broken.
- Fault light cells break points at the same time, does not affect other normal work of light from the stack.
- Technical Data Rated coltage: DC1000V
- Breaking capacity: 20KA
- Function level: PV.

Dimensions

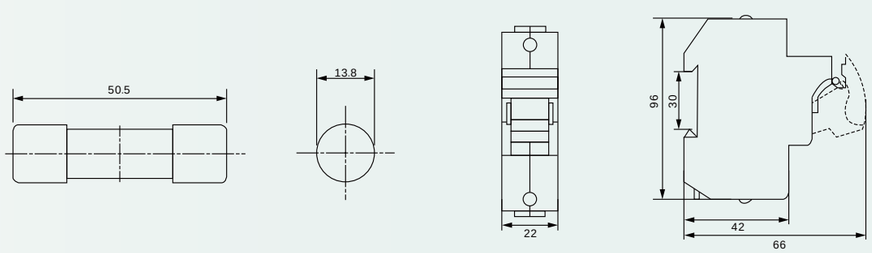

Installation

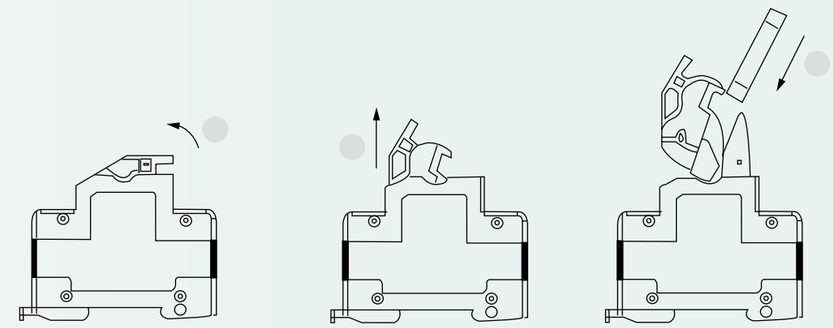

Characteristic Curve

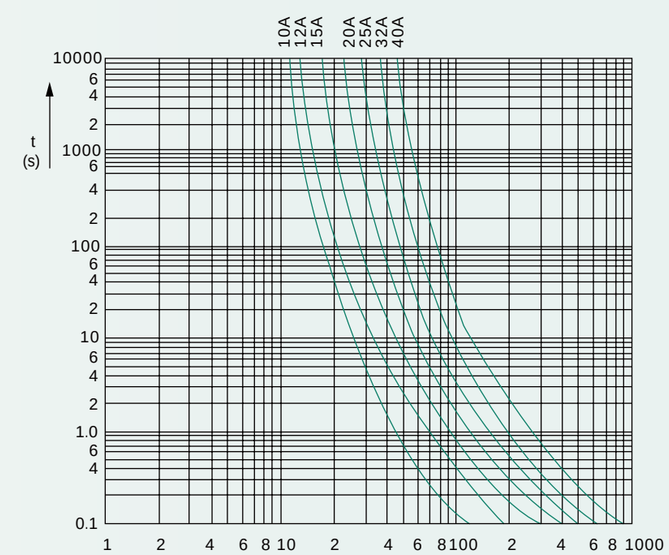

FEEO

FDS Series

Solar DC FUSE

Fuse features light in weight, small in size, low in power loss and high in breaking capacity. This product has been widely used in overload and short circuit protection of electric installation. This product conforms to ICE 60269 standard with all of the rating at the world advanced level.

Structural Characteristics

- According to IEC60269-6
- Rated current: 160-630A
- Rated voltage: DC 1000V
- Rated breaking capacity: DC 50kA
- Operating class gPV for Solar protection
- See Model of product: NH00/NH1/NH2

Specifications

Model		FDS-160/250/400/630
Rated Voltage Ue (V DC)		1000
Rated Current In (A)	FDS-160	63,80,100,160
	FDS-250	80,100,160,200,250
	FDS-400	250,315,400
	FDS-630	400,500,630
Biggest Block Ability (KA)		50

Characteristic Curve

FDS-160 Characteristic curve

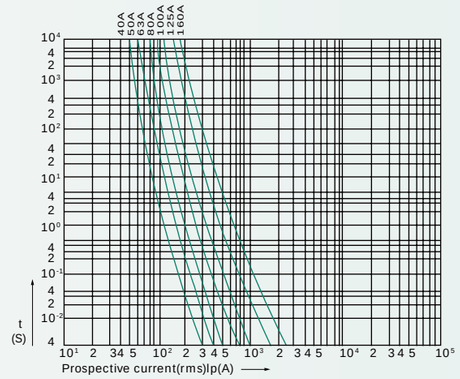

FDS-250 Characteristic curve

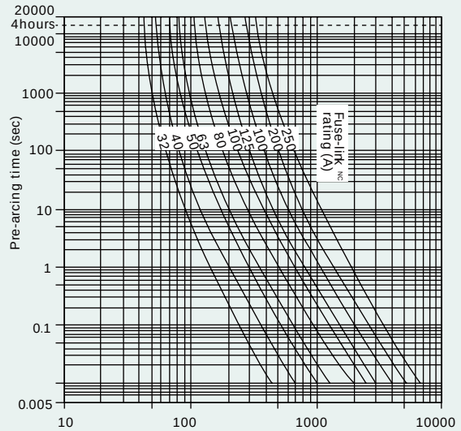

FDS-400 Characteristic curve

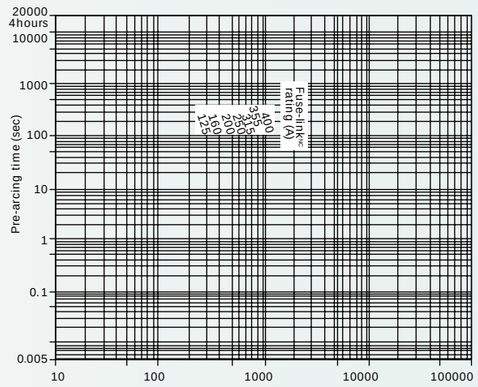

FDS-630 Characteristic curve

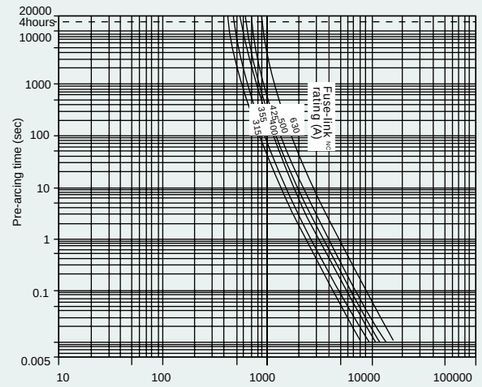

FEEO

FHDS

Solar DC 1500V FUSE

A range of 10x85mm PV fuses specifically designed for protecting and isolating photovoltaic strings. These fuse links are capable of interrupting low overcurrents associated with faulted PV systems (reverse current, multi-array fault). Available in four mounting styles for application flexibility.

Structural Characteristics

- According to IEC60269-6
- Rated current: 1-35A
- Rated voltage: DC 1500V
- Rated breaking capacity: DC 20kA
- Operating class gPV for Solar protection

Specifications

Model	FHDS
Pole	1P
Rated Voltage Ue (V DC)	1000
Rated Current In (A)	1,2,3,4,5,6,8,10,12,15,20,25,30,32,35
Biggest Block Ability (KA)	20

Connection and Installation

Connection (mm2)	2.5-10
Working Temperature	-30℃ ~ +70℃
Resistance And Damp Hot	Class 2
Altitude (m)	≤ 2000
Relative Humidity	≤ 95%
Protection Class/Degree	IP20
Pollution	3
Installation Environment	No obvious shock and vibration
Installation Class/Type	Class III/DIN rail

PV Fuse Features

- Specifically designed to provide fast-acting protection under low fault current conditions associated with PV systems.
- Variety of mounting options for flexibility.
- Fuses meet IEC photovoltaic standards for global product acceptance.
- Low watts loss for greater PV system e□ciency.
- Low heat rise permits more precise sizing.
- In-line crimp terminal version is easy to apply in wire harness construction.

Dimensions

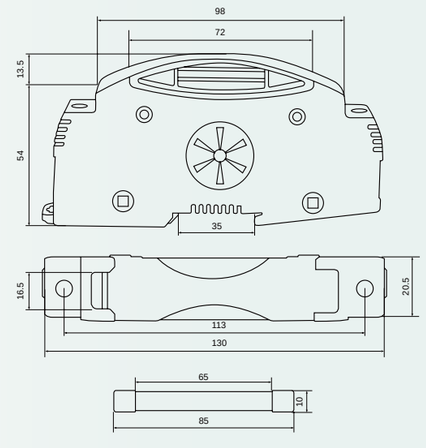

Characteristic Curve

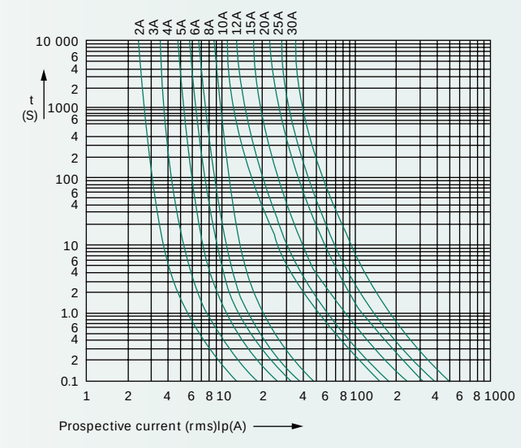

FEEO

FHB Series

Fuse Type Isolator Switch

FHB series fuse type isolator is a product with advanced international level in the middle of the 90s. The insulation voltage is 800V, rated voltage up to 690V, rated current up to 630A, rated frequency 50Hz, power distribution and electric circuit high short-circuit current, used as power switch, isolation switch and emergency switch and circuit protection purposes, but generally not directly as a single motor for opening and closing.

Technical Parameters

Convention heating current Ith	160A	250A	400A	630A
Rated insulation voltage Ui	800V/1500V			
Rated operating voltage Ue	AC400V, 690V/DC1000V			
Rated frequency	50Hz			
Rated connection capacity (A r.m.s)	10Ie			
Rated breaking capacity (A r.m.s)	8Ie			
Rated limit short-circuit current (r.m.s)	50KA			
Rated operating current	160A	250A	400A	630A
	100A	200A	315A	415A
Mechanical life (times)	5000	3000	2000	1500
Electric life (times)	1000	600	400	300
Weight (3P) kg	1.2	3.6	4.8	6.5
Auxiliary micro switch main parameters	50Hz, AC-15, 230V, 3A			

Dimensions

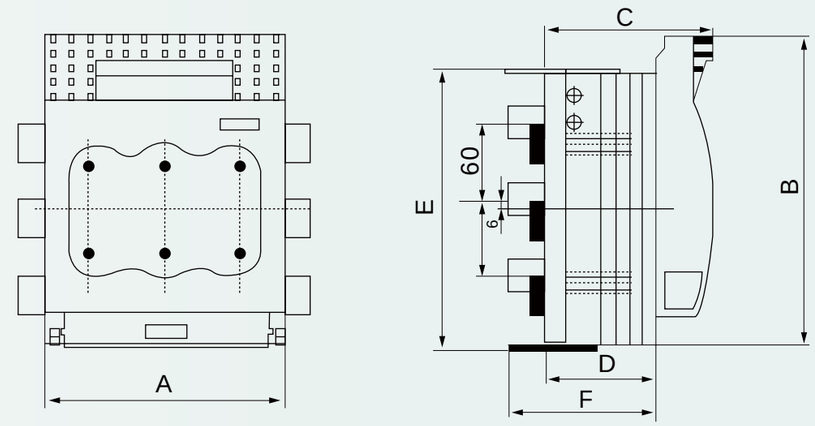

Model/Size	A	B	C	D	E	F
FHB-160/3	160	200	97	60	200	87
FHB-250/3	185	247	128	88	221	87
FHB-400/3	210	290	145	97	268	125
FHB-630/3	256	300	160	112	285	139

FEEO

FDIS

Solar DC Waterproof Isolator Switch

- Compact and suitable were space is limited
- DIN rail mounting for easy installation
- Load-breaking up to 8 times rated current making it ideal for motor isolation
- Double-break with silver rivets-superior performance, reliability and long lasting
- High breaking capacity with 12.5 mm contact air gap
- Easy snap-on fitting of auxiliary switches

Technical Parameters

Technical Parameters			FDIS-32
The following CNC according to IEC60947-3,the use of category DC21B			
Main Parameters			
Rated Insulation Voltage	Ui		1500V
Rated heating Current	Ithe		32A
Rated Impulse Withstand Voltage	Uimp		8000V
Rated Short-time Withstand Current (1s)	Icw	2,4	1000A
		2H	1700A
Rated Short-circuit Making Capacity	Icm	2,4	1000A
		2H	1700A
Rated Short-circuit Current	Icc		5000A
Maximum Fuse Specifications	gL(gG)		80A
Mechanical Life			10,000
DC poles			2 or 4
Distance Between Contacts (pole-to-pole)			8mm

Technical Parameters

Technical Parameters			FDIS-32
Operating Temperature			-25℃ ~ +70℃
Storage Temper ature			-45℃ ~ +70℃
Class of pollution			2
Over voltage category			I to III
IP level			IP66

Wiring Diagram

SDIS-32	...2	...4	...4S	...4T	...4B
Contacts Wiring Diagram					
Switching exeample					

Dimensions

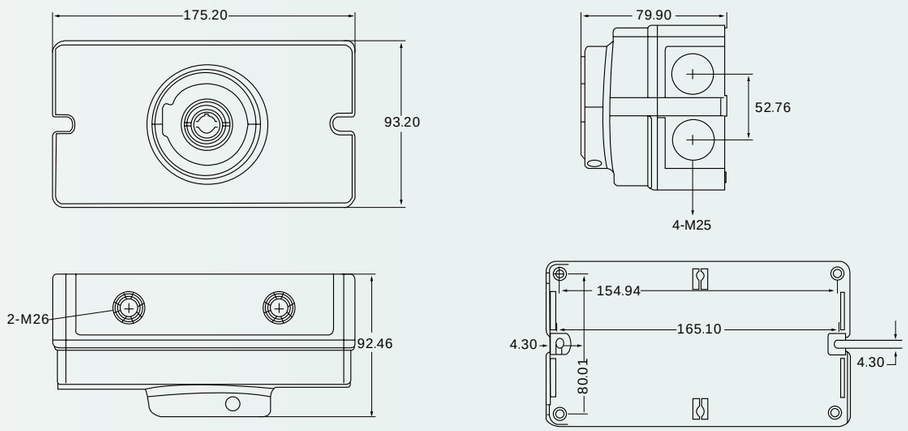

Technical Data

DC21B IEC60947-3							Poles in series	Strings	Model	Contact configuration
500V	600V	700V	800V	900V	1000V	1500V				
32	32	27	23	20	13	5	2	1	FDIS-32-2	
32	32	27	23	20	13	5	2	2	FDIS-32-4	
32	32	32	32	32	32	32	4	1	FDIS-32-4T	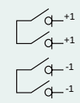
32	32	32	32	32	32	32	4	1	FDIS-32-4B	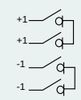
32	32	32	32	32	32	32	4	1	FDIS-32-4S	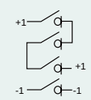

Curve

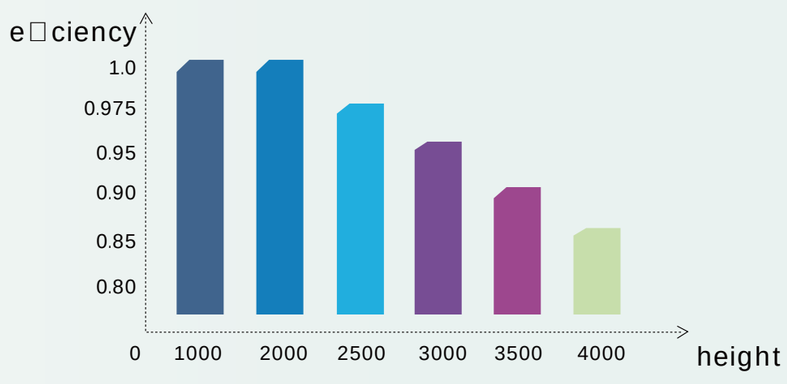

FDIS(for combiner box)

Solar DC Isolator Switch

- Available in 2 to 4 Pole, application in the distribution box
- TUV certificated
- 5 years guarantee certificate
- Handy Locking Mechanism while off keeps it safe from Children or Un-Authorized access
- Operator Independent trigger Ratchet Switching and Knife Edge Self Cleaning Contact Mechanism

Technical Parameters

Technical Parameters			FDIS-NHV
Data according to IEC 60947-3,utilization category DC-PV1/ DC-PV2			
Main Parameters			
Rated Insulation Voltage	Ui		1500V
Rated heating Current	Ithe		32A
Rated Impulse Withstand Voltage	Uimp		8000V
Rated Short-time Withstand Current (1s)	Icw	2,4	1000A
		2H	1700A
Rated Short-circuit Making Capacity	Icm	2,4	1000A
		2H	1700A
Rated conditional short-circuit current	Icc		5000A
Max.fuse size	gL(gG)		80A
Mechanical Life			10,000
Number of DC poles			2 or 4
Distance of contacts (per pole)			8mm

Technical Parameters

Technical Parameters			FDIS-NHV
Operating Temperature			-25℃ ~ +70℃
Storage temperature			-40℃ ~ +70℃
Pollution degree			2
Over voltage category			I to III
IP level			IP20

Dimensions

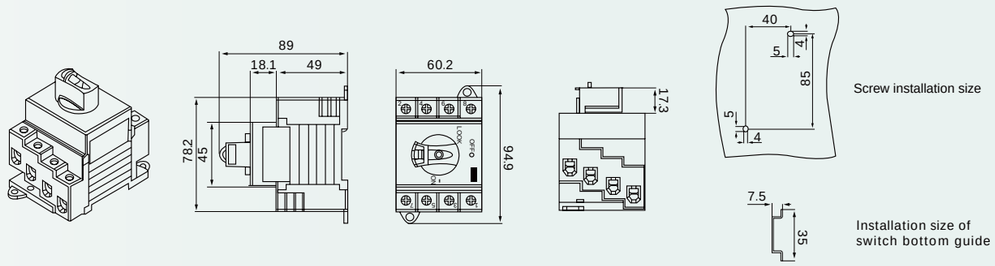

Technical Data

DC21B IEC60947-3								Poles in series	Strings	Model	Contact configuration
500V	600V	700V	800V	900V	1000V	1200V	1500V				
32	32	32	32	23	16	/	/	2	1	FDIS-NHV100-2	
32	32	32	32	23	16	13	7	2	1	FDIS-NHV120-2	
32	32	32	32	23	16	/	/	4	2	FDIS-NHV100-4	
32	32	32	32	32	32	/	/	4	1	FDIS-NHV100-4S	

Wiring Diagram

FDIS-NHV100	...2	...2H	...4	...4S	...4B	...4T
Contacts Wiring Diagram		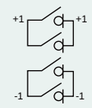	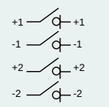	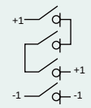	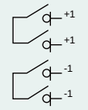	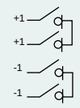
Switching exeample	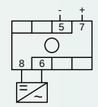	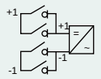	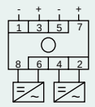	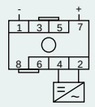		

Curve

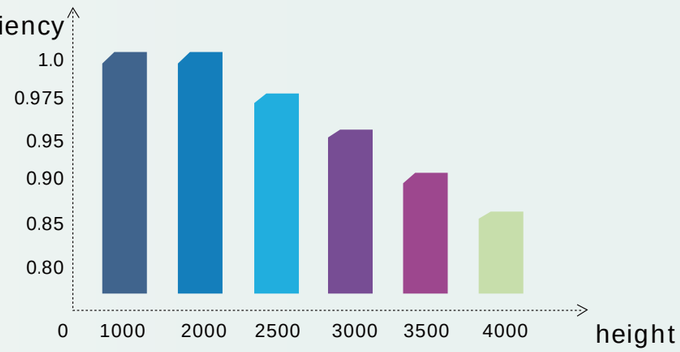

FEEO

FDH-63

Solar DC Mini Isolator Switch

FEEO research and development FDH photovoltaic dc isolator is mainly used solar power distribution system, namely pv junction box, etc. direct current electrical equipment. Rated voltage 1200 VDC, rated current 63 A,science of arcing design solar photovoltaic power generation system reliable operation.

NOTE: This product do not have Thermal trip and magnetic trip.

Technical Parameters

Electrical Characteristics					
Code		FDH-63			
Standard		IEC60947-3/GB14048.3			
Pole		1P	2P	3P	4P
Rated voltage	Ue	250V DC	550V DC	750V DC	1000V DC
Max current	Imax	63A			
Rated current	In	16, 32, 63			
Rated insulation voltage	Uimp	1200V DC			
Rated impact voltage		4KV			
Life					
Mechanical life		2000			
Electric life		4000			
Isolation function		Yes			

FEEO

FDHM

Solar DC Moulded Case Isolator Switch

FEEO Research and development of the photovoltaic dc FDHM series molded isolating switch is mainly used in large scale photovoltaic power distribution system, including pv junction box, photovoltaic inverter, live up to what our dc cabinet, etc. Rated voltage 1500 VDC, rated current is 1250 A, can quickly disconnect fault current of dc power supply distribution system, solar photovoltaic power generation system reliable operation.

Technical Parameters

FDHM Series Solar DC Isolating Switch													
Code		FDHM-125				FDHM-250				FDHM-400		FDHM-630	
Pole		1P	2P	3P	4P	1P	2P	3P	4P	3P	4P	3P	4P
Max current		125A				250A				400A		630A	
Electrical properties													
Rated voltage(DC)	Ue	250V	550V 800V	750V	1000V 1500V	250V	550V 800V	750V	1000V 1500V	750V	1000V 1500V	750V	1000V 1500V
Rated current	N	63, 80, 100, 125				125, 140, 160, 180, 200, 250				315, 350, 400		500, 630	
Rated insulation voltage	Ui	1500V DC											
Rated impact voltage	Uimp	8KV											
Withstand voltage		3.8KV		3.8KV		3.8KV				3.8KV			

AC Series


FEEO
FNTS-125/2P
FPVM-250
FPVM-350
FSP-A20
FE-125
FCDS-63
FCDS-63L

FEEO

FE7-63

Mini Circuit Breaker (AC MCB)

FE7-63 have protective function as overload,and are used in lighting distribution system in industry commerce and dwelling,and protect fractional electric motors.And they also have many merits of high protective grade(up to IP20),high breaking capacity,reliable sensitive,action convenient,multi pole assembling,long life ect.The are mainly adapted to the circuit of AC 50Hz,250V in single pole,415V in double,three, four poles for protecting overload and short circuit.Mean while, they are also used in turning on or off the electric apparatus and lighting circuit under the normal conditions.

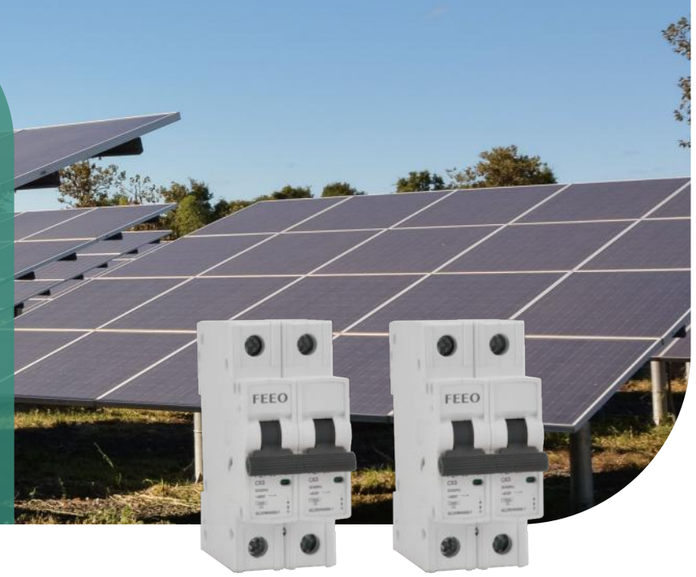

Specifications

Standard	EN60898(IEC60898)/IEC60947-2
Rated Voltage	230V/400V AC
Rated Current	3, 6, 10, 16, 20, 25, 32, 40, 50, 63A
Rated Breaking Capacity	10KA IEC60898(3~63A)
Characteristic Curve	B, C, D
Max. Fuse That Can Be Connected To	100AGL (>10KA)
Selective Grade	3
Working Ambient Temperature	-5℃ ~ +40℃
Enclosed Protective Class	IP20
Nominal Frequency	50/60Hz
Maximum Operating Voltage(Ue)	≥ 400V AC
Insulation Voltage(Ui)	≥ 6KV
Voltage Testing Pulse(Uimp)	≥ 10KA
Maximum Cutting Capacity(Icu)	≥ 10KA
Electrical Life	Not less than 8000 times
Mechanical Life	Not less than 20000 times

Dimensions

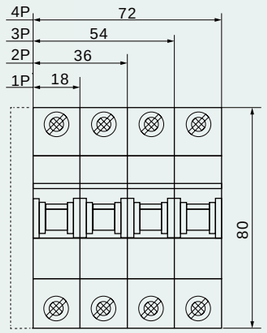

Over current tripping characteristic

Item	Model	Rated Current	Initial State	Test Current	Limited Time	Limited Time	Remark
a	B, C, D	1~ 63A	Cold state	1.13In	t<1h	Non-tripping	
b	B, C, D	1~ 63A	Immediately after the previous test	1.45In	t<1h	Tripping	The current rise steadily to a fixed value within 5s
c	B, C, D	In ≤ 32A	Cold state	2.55In	1s<t<60s	Tripping	
		In 32A	Cold state	2.55In	1s<t<120s	Tripping	
	B			3In	t≤0.1s	Non-tripping	
				5In	t<0.1s	Tripping	
	C	1~ 63A	Cold state	5In	t≤0.1s	Non-tripping	
				10In	t≤0.1s	Tripping	
	D			10In	t≤0.1s	Non-tripping	
				10In	t<0.1s	Tripping	

Characteristic Curve

FE7-63 Characteristic curve

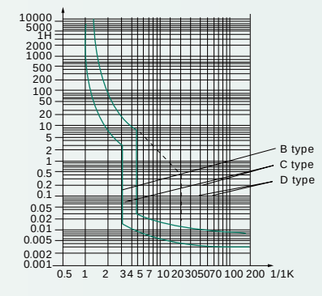

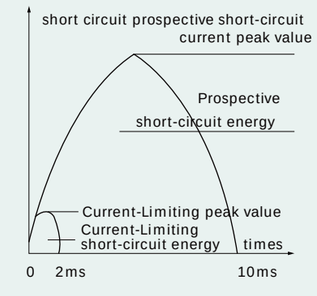

Current correction values used at different ambient temperatures

Temperature / Fixed current (A) / Rated Current (A)	-35	-30	-20	-10	0	10	20	30	40	50	60	70
3A	3.9	3.78	3.69	3.57	3.42	3.3	3.12	3	2.88	2.79	2.64	2.49
6A	7.8	7.56	7.38	7.14	6.84	6.6	6.24	6	5.76	5.64	5.28	4.98
10A	13.2	12.7	12.5	12	11.5	11.1	10.6	10	9.6	9.3	8.9	8.4
16A	21.12	20.48	20	19.2	18.4	17.76	16.96	16	15.36	14.88	14.24	13.44
20A	26.4	25.6	25	24	23	22.2	21.2	20	19.2	18.6	17.8	16.8
25A	33	32	31.25	30	28.75	27.75	26.5	25	24	23.25	22.25	21
32A	42.56	41.28	40	38.72	37.12	35.52	33.93	32	30.72	29.76	28.16	26.88
40A	53.2	51.2	50	48	46.4	44.8	42.4	40	38.4	37.2	35.56	33.6
50A	67	65.5	63	60.5	58	56	53	50	48	46.5	44	41.5
63A	83.79	81.9	80.01	76.86	73.71	73.71	66.78	63	60.48	58.9	55.44	52.29

Current correction factor used at different altitudes

Rated Current (A)	Different altitude correction factors		
	≤ 2000m	2000~3000m	≥ 3000m
3,6,10,16,20,25,32,40,50,63A	1.0	0.9	0.8

Wire connection terminals

Rated current In(A)	Copper wire nominal cross sectional area(mm)
3,6	1
10	1.5
16,20	2.5
25	4
32	6
48	10
63	10

FEEO

FE-125

Mini Circuit Breaker (AC MCB)

FE-125 high breaking capacity circuit breaker is used for AC 50/60HZ, single-pole 230V or two, three, four-pole 415V circuit for protecting the circuit that overload and short circuit may take place. It can be used in lighting and electric motor distribution system. Mean while it is applicable to an unfrequented switch over the electric apparatus and lighting circuit under normal condition. Breaking capacity is up to standard of IEC60947-7 10KA.

Specifications

Model	FE-125			
Rated Current	63, 80, 100, 125A			
Rated Voltage	230V/415V AC			
Electrical Life	6000 Times			
Mechanical Life	20000 times(C.O.)			
No. of Pole	1P, 2P, 3P, 4P			
Weight	1P	2P	3P	4P
Weight	150	300	450	600

Dimensions

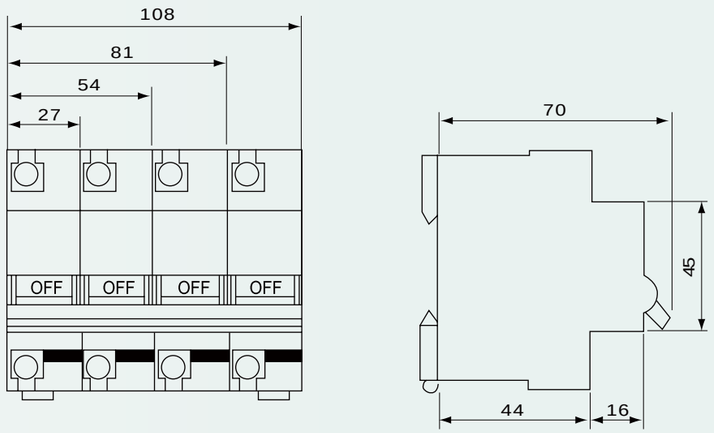

Over current tripping characteristic

Item	Rated Current	Initial State	Test Current	Limited Time	Prospective Result	Remark
a	In=63	Cold state	1.05In	t≤1h	Non-tripping	
	In>63	Cold state	1.05In	t≤2h	Non-tripping	
b	In=63	Hot state	1.3In	t<1h	Tripping	The current rise steadily to a fixed Tripping value within 5s
	In>63	Hot state	1.3In	t<2h	Tripping	
c	In≥63	Cold state	8In	t≤0.2s	Non-tripping	
			12In	t≤0.2s	Tripping	

Current correction values used at different ambient temperatures

Temperature / Fixed current (A) / Rated Current (A)	-35	-30	-20	-10	0	10	20	30	40	50	60	70
63A	90.40	88.52	84.75	80.33	76.55	72.45	67.73	63	57.65	51.98	46.31	40.95
80A	114.8	112	106.8	101.6	96.4	90.8	85.6	80	74	67.6	60.4	53.2
100A	143.5	140.5	134.5	127.5	121	113.5	107.5	100	92.5	84.5	75.5	66.5
125A	178.75	173.75	164.38	156.25	148.75	140.63	135	125	116.25	107.5	97.5	85

FEEO

FR7-63

WIFI Smart Circuit Breaker

WIFI Smart circuit breaker (hereinafter referred to as circuit breaker), suitable for rated operating voltage to 230V/400V, AC 50Hz, rated current to 80A lines. When the personal electric shock or the grid leakage current exceeds the specified value, the circuit breaker can quickly cut off the fault power supply in a very short time, protect the safety of the human body and electrical equipment, and play the role of overload and short circuit protection for the line, and can also be used as the infrequent operation of the line conversion.
This product conforms to GB16917.1, IEC61009-1 standards, with the international advanced level.

Specifications

Rated voltage Un	230V AC (1P+N, 2P),400V AC (3P, 3P+N, 4P)
Rated current In	6, 10, 16, 20, 25, 32, 40, 50, 63, 80A
Rated residual operating current (I△n)	30, 50, 100, 300mA
Rated residual inactive current	0.5 I△n;
Residual current protection type	AC type
Poles	1P+N, 2P, 3P, 3P+N, 4P
Instantaneous trip form	B, C, D type (can be produced according to user requirements)
Rated short-circuit breaking capacity	Icn=Ics=6kA
Rated remaining switching and breaking capacity	500A (In≤50A); 10In (In≥63A)
Remote control automatic closing time (seconds)	t≤3s
Remote control automatic switching time (seconds)	t≤3s

Specifications

Overvoltage	overvoltage tripping value 270V-280V, recovery voltage 245V-255V
Undervoltage	undervoltage trip value 160V-170V, recovery voltage 180V-190V
Tightening torque	2.5Nm
Pollution level	Level 2
Protection level	IP20
Installation Category	3 categories

Function description and explanation

Function description	FR7-63	Traditional circuit breaker	Interpretation of meaning
Overload protection	Yes	Yes	When the rated current exceeds the predetermined value, the circuit breaker is disconnected within the predetermined time
Short circuit protection	Yes	Yes	When the short circuit current exceeds the predetermined value, the circuit breaker is disconnected within the predetermined time
Leakage protection	Yes	Yes	When the leakage current exceeds the predetermined value, the circuit breaker is disconnected within the predetermined time
Over and under voltage protection	Yes	No	When the rated voltage exceeds or is lower than a predetermined value, the circuit breaker is disconnected within a predetermined time
Remote control switching	Yes	No	Remote control circuit breaker automatic opening and closing
Overtemperature protection	Yes	No	The internal temperature of the circuit breaker is monitored remotely. When the temperature exceeds the predetermined value, the circuit breaker is disconnected
Load limit	Yes	No	Remote monitoring of circuit breaker load, more than the predetermined value, circuit breaker disconnected
Voltage monitoring	Yes	No	Remote monitoring of circuit breaker operating voltage status
Current monitoring	Yes	No	Remote monitoring of circuit breaker operating current status
Electric energy measurement	Yes	No	Remote monitoring of power usage in the line
Maintenance safety switch	Yes	No	The maintenance safety switch can be opened to prohibit remote control of circuit breaker opening and closing
Automatic switch button	Yes	No	Press the button, the circuit breaker will automatically open or close
Leakage current monitoring	Yes	No	Remote monitoring of circuit breaker leakage current status
Remote timing control switching	Yes	No	Remote control circuit breaker at a fixed time to open and close to achieve energy saving and consumption reduction

FEEO

FEM1

Moulded Case Circuit Breaker (AC MCCB)

FEM1 series moulded case circuit breaker is a new type product developed and manufactured by Adopting international advanced technology. It is supplied with rated insulation voltage 800V and used for circuit of AC 50Hz, rated operation voltage AC 400V or below rated operation current up to 1600A for infrequent changing over and starting of the motors. Equipped with the protection devices for over-current, short circuit and under voltage, the product is capable of preventing damage of circuits and supply units. The product conforms to IEC60947-2 standard.

Working Condition

- Not over altitude 2000m
- Ambient temperature is between -5℃ ~ +40℃
- Withstand the influence of moist air;
- Withstand the influence of smoke fog,salt mist;
- Withstand the influence of fungus;
- The max. gradient is 22.5℃;
- Working reliable under the condition of normal vibration in ship;
- Working reliable under the condition of earth quake (4g);
- Working in the medium which not any explosive, no enough dielectric to corrode metal, no gas to damage insulation and elctric conduction dust.
- Working in the place would not be invaded by rain and snow.
- According to the pole number of products,it classifies two-pole(100A, 225A), three-pole(no four-pole for FEM1-800), the neutral pole(N-pole) of the four-pole breakers has four types;
  TypeA: N-pole without over-current release unit, it has been connected all along, and does not act with other three-pole to turn on or off.
  Type B: N-pole without over-current release unit, it could act with other three-pole;
  Type C: N-pole fixed with over-current release unit, it could act with other three-pole;
  Type D: N-pole fixed with over-current release unit, it has been connected all along, and does not act with other three-pole to turn on and off.

Working Condition

- According to rated current of products, it classifies:
  FEM1-63: (6),10A, 16A, 20A, 25A, 32A, 40A, 50A, 63A, (no over-load protection for 6A);
  FEM1-125: (10), 10A,16A, 20A, 25A, 32A, 40A, 50A, 63A, 80A,100A, 125A;
  FEM1-250: 100A, 125A, 140A, 160A,180A, 200A, 225A, 250A;
  FEM1-400: 225A, 250A, 315A, 350A, 400A;
  FEM1-630: 400A, 500A, 630A;
  FEM1-800: 630A, 700A, 800A;
- According to connection mode, it classifies front in wiring,rear in wiring, and plug in type.
- According to over-current release type, it classifies the thermodynamic-magnetic (binary) type and magnetic (instantaneous) releases.

Protective Characteristics

The thermodynamic of a circuit breaker provides the feature of inverse time-delay,while the magnetic release the instantaneous operation as shown on Table 1 (distribution circuit breaker) and Table 2 (motor protection circuit breaker):

Table 1 (for distribution)

Rated current of release (A)	Thermodynamic release (ambient temp:land+40℃, marin+45℃)		Electromagnetic release action current (A)
	1.05In(cold state) Non-action time(h)	1.30In(Hot state) Action time(h)	
10≤In≤63	1	1	10In±20%
63≤In≤100	2	2	5In±20% 10In±20%
100≤In≤800	2	2	

Table 2 (for protective motor)

Rated current of release (A)	Thermodynamic release (ambient temp:land+40℃, marin+45℃)				Electromagnetic release action current (A)
	1.0In(cold state) Nonaction time(h)	1.20In(Hot state) Action time(h)	1.50In(Hot state) Action time(h)	7.2In(cold state) Nonaction time(h)	
10≤In≤255	2	2	4min	4s<Tp≤10s	12In±20%
225≤In≤800			8min	6s<Tp≤20s	

Current correction values used at different ambient temperatures

Model	Rated Frame Current	Rated Current	Rated Working Voltage	Rated Insulated Voltage	Rated Ultimate Short-circuit Breaking Capacity KA 400V	Rated Runing Breaking Capacity KA 400V	Overall Dimension			Mounting Dimension (Front in Wiring)		
							L	W 3P/4P	H	A	B	4-Φd
FEM1-63L	63A	6,10,16,20,25, 32,40,50,63A	AC400V	AC500V	25	18	135	78	73.5	25	117	Φ3.5
FEM1-63M					50	35	135	78/103	81.5			
FEM1-125L	125A	10,16,20,25, 32,40,50,63, 80,100,125A	AC690V	AC800V	35	22	150	92	68	30	129	Φ4.5
FEM1-125M					50	35	150	92/122	86			
FEM1-125H					85	50						
FEM1-250L	250A	100,125,140, 160,180,200, 225,250A	AC690V	AC800V	35	22	165	107	86	35	12	Φ4.5
FEM1-250M					50	35	165	107/142	103			
FEM1-250H					85	50						

Current correction values used at different ambient temperatures

Model	Rated Frame Current	Rated Current	Rated Working Voltage	Rated Insulated Voltage	Rated Ultimate Short-circuit Breaking Capacity KA 400V	Rated Runing Breaking Capacity KA 400V	Overall Dimension			Mounting Dimension (Front in Wiring)		
							L	W 3P/4P	H	A	B	4-Φd
FEM1-400L	400A	225,250,315, 350,400A	AC690V	AC800V	50	35	257	150/198	105	44	194	Φ7
FEM1-400M					65	42	257	150	106.5	44	194	Φ7
FEM1-400H					100	65						
FEM1-630L	630A	400,500,630A	AC690V	AC800V	50	35	270	92/122	110	58	200	Φ7
FEM1-630M					65	42	270	92/122	110			
FEM1-630H					100	65	275	107	115.5	70	243	Φ7
FEM1-800M	800A	630,700,800A	AC690V	AC800V	75	50	275	107/142	115.5	70	243	Φ7
FEM1-800H					100	65						

See Table 4 for sectional area of connecting conductor and the proper rated current:

Rated Current Value	10	16,20	25	32	40,50	63	80	100	125	160	180,220,225	250	315,350	400
Cable(mm²)	1.5	2.5	4	6	10	16	25	35	50	70	95	120	185	240

Table 5

Rated Current Value	Cable		Copper Row	
	Cable(mm²)	Quantitly	Dimension(mm)	Quantitly
500	150	2	30×5	2
630	185	2	40×5	2
700,800	200	2	40×5	2

FEEO

FSP-A

Type 2 AC
Surge Protective Device

FSP-A series surge protection deviceis suitable for TN-S, TN-C-S, TT, IT etc, power supply system of AC 50/60Hz,<380V, installed on the joint of LPZ1 or LPZ2 and LPZ3. It's designed according to IEC61643-1, GB18802.1, it adopts 35mm standard rail,there is a failure release mounted on the module of surge protection device, When the SPD fails in breakdown for over heat and over-current, the failure release will help electric equipments separate from the power supply system and give the indication signal, green means normal, red means abnormal, it also could be replaced for the module when has operating voltage.

Product Features

- Inside over-current and over-heat protection, temperature control open circuit.
- Module design, convenient installation, could be replaced online.
- Time of response <25ns
- The color of visible window shows operating status, green means normal, red means abnormal

Specifications

Technical Parameters					
Model	FSP-A				
Pole	1P	2P	3P	4P	
Rated Operating Voltage Un (V~)	230V/275V		385V/420V		
Maximum Continuous Operating Voltage Uc(V~)	275/385/420VAC				
Voltage protection Level Up (V~)kV	≤2.5				
Nominal Discharge Current In μs kA	5	30	30	60	60
Maximum Discharge Current Imax μs kA	10	60	60	100	100

Specifications

Technical Parameters	
Model	FSP-A
Response Time (ns)	<25
Test Standard	IEC61643.1, GB18802.1
Operating Environment(centigrade)	-40℃ ~ +85℃
Max Connection Line	35mm2 hard wire/35mm2 strand wire copper line
Recommended Connection Line	16mm2 hard wire/25mm2 strand wire copper line
Installation	Standard Rail 35mm
Material of Outer Covering	Burning-proof Nylon

Characteristic Curve

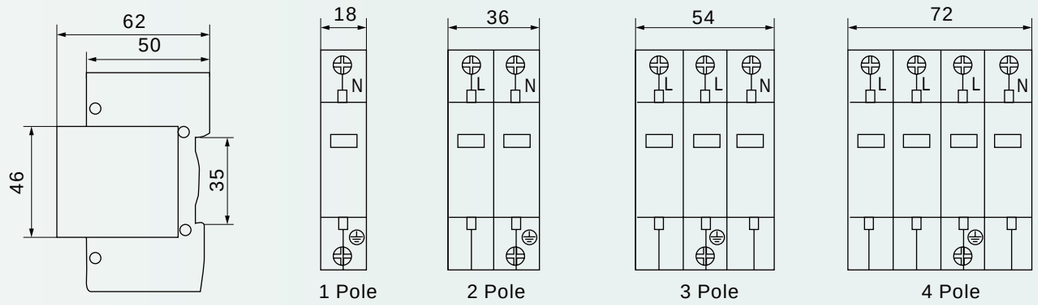

FEEO

FWP-A

Type 1+2 AC
Surge Protective Device

Type 1 + 2 SPD's have characteris cs of type 1 but also type 2, they are capable of discharging a very high lightning current (T1 10/350μs) and they have as well a low residual voltage (Up). They are installed in the main distribu on switchboard but also in subdistribu- on board. Because of their power, Type 1 + 2 SPD's can let pass through a too high residual voltage, if the announced Up is not compable with the withstand voltage of the equipment to protect or if the cable length to the equipment is longer than 10m.

Features

- Patented QuickSafe ® technology
- Safety Reserve system
- Din rail moun ng
- Pluggable
- Improved safety
- Back up protec on up to 160 A Fuse or 125 A Mcb

Specifications

Key characteristics	
Protection mode	L-N/L-PE/N-PE
Number of protected lines	1-4
Test class	I-II
Integrated thermal disconnector	Yes
End of life indicator	Yes
Safety reserve	Yes

Specifications

Electrical characteristics		
Nominal discharge current	/n (8/20)	20kA
Maximal discharge current	/max (8/20)	40kA
Impulse current	/imp (10/350)	7kA
maximal continuous operating voltage	Uc	275/385/420V
Type of current/frequency		a.c.50/60Hz
Voltage protection level at In	Up(L-PE)	1,2kV
Voltage protection level at In	Up(L-N)	-
Voltage protection level at In	Up(N-PE)	-
Short circuit withstand	/SCCR	100kA
Total current	/TOTAL	20kA
Follow current interrupted	/f	-/-kA
Ground residual current	/PE	< 350μA
TOV withstand(L-N:5s/N-PE:200 ms)	UT	337V
Voltage Combination Wave	Uoc	20kV
Required thermal/back up protection		
Curve B or C Circuit breaker		≤125A
gG-gL fuse		≤160A
Comments		
Mechanical characteristics		
Dimensions	HxWxD	89×18×69mm
Wire range:Solid wire		2.5…25mm²
Wire range:Stranded wire		12.5mm²
Stripping length		Per 1mm
Packing quantities		piece
Miscellaneous characteristics		
Maximal altitude		2000m
Weight		150g
Response time		25ns
Fire resistance according to UL 94		< V-0

FEEO

FRS-A

Type 1 AC
Surge Protective Device

- Large discharge energy
- No leakage
- No follow current
- Modular installation
- High safety coeffcient
- Long service life
- Strong environmental resistance
- Voltage protection level is less than 2500V

PV Fuse Description

- FRS-A series voltage limiting type/voltage switching type primary power surge protectors are designed according to IEC and EN 61643 standars,and applied to surge protection at the first stage of the power supply system. Products are standard 35mm rail mounting methods.
- FRS-A series voltage limiting type/voltage switching type primary power surge protectors with high flow capacity, single module impact current up to 50kA (10/350s), can prevent all kinds of lightning surge. Products are applies to the power supply of the equipment system in the higher risk area of lightning strike. The first surge protection can be used in single phase/three-phase power supply line.

The scope of products

- Main power distribution panel in buildings
- Overhead distribution box in buildings
- Outdoor distribution cabinet/distribution box

Product capability parameter

Model	FRS-A15	FRS-A25	FRS-A50
SPD port	2 Poles	3 Poles	4 Poles
SPD category	Voltage limited type	Voltage limited type	Voltage limited type
Test category	Class I test	Class I test	Class I test
Un	220/380VAC; 50/60Hz		
Uc	275/385/420VAC; 50/60Hz		
Insulation resistance	>100MΩ	>100MΩ	>100MΩ
limep (10/350μs)	15kA	25kA	50kA
Up (1.2/50μs)	1.5kV	1.5kV	1.8kV
tA	≤100ns	≤100ns	≤100ns
Size	144×90×66	144×90×66	144×90×66
Sectional area of wires	6~25mm²	6~25mm²	6~25mm²
Installation method	35mm standard rail (EN50022/DIN46277-3)		
Woeking environment temperature	-40 ~ 85℃		
Sheathing materia	Plastic,accord with UL94 V-0		
Protection level	IP20		
Autehntication	CQC CE Type test		

FEEO

FAH-63

AC Mini Isolator Switch

FAH-63 series isolator is suitable for using in the distributing and controling loop with AC 50Hz or 60Hz, rated working voltage 230 or 400V and below. It is mainly used for terminal electrical main switch, also can be used for controlling different motor, small power electrical and lighting and so on. This product conforms to GB14048.3 / IEC60947-3 standards.

NOTE: This product do not have Thermal trip and magnetic trip.

Main Technial Parameter

1. The main technical parameter of the isolator

Rated Voltage(V)	Rated Current	Rated Onoff Capability	Rated Short Time Withstand Current(A)	Rated Short Circuit Onoff Capability	Rated Fuse Short Circuit Current(KA)
230/400	16,32,63	1.05Ue、3Ie COS ϕ=0.65	20Ie、t=1s	20Ie、t≥0.1s COS ϕ=0.9	20

2. The pole No. of the breaker can be classified as:1-pole, 2-pole, 3-pole and 4-pole.
3. This breaker is inlaid installation mode (can be installed on the installation rail).
4. Power frequency withstand voltage:after being in condition to hot and humid performance,this breaker can bear 3000V power frequency withstand voltage test for 1 min and without any insulation flashover and breakdown phenomenon.
5. Mechanical and electric life:the mechanical life is 10000 times,and electric life 6000 times.

FEEO

FAHM

AC Moulded Case Isolator Switch

FAHM series moulded case isolator switch is a new type product developed and manufactured by Adopting international advanced technology. It is supplied with rated insulation voltage 800V and used for circuit of AC 50Hz, rated operation voltage AC 400V or below rated operation current up to 1600A for infrequent changing over and starting of the motors. The product conforms to IEC60947-3 standard.

NOTE: This product do not have Thermal trip and magnetic trip.

Technical Parameter for The Breaker

Model	Rated Frame Current	Rated Current (A)	Rated Working Voltage	Rated Insulated Voltage	Overall Dimension			Mounting Dimension (Front in Wiring)		
					L	W 3P/4P	H	A	B	4-Φd
FAHM-63	63A	6,10,16,20,25,32,40,50,63	AC400V	AC500V	135	78	73.5	25	117	Φ3.5
FAHM-125	125A	10,16,20,25,32,40,50,63,80,100	AC690V	AC800V	150	98	68	30	129	Φ4.5
FAHM-250	250A	100,125,140,160,180,200,225	AC690V	AC800V	165	107	86	35	12	Φ4.5
FAHM-400	63A	225,250,315,350,400	AC690V	AC800V	257	150/198	105	44	194	Φ7
FAHM-630	125A	400,500,630	AC690V	AC800V	270	182/240	110	58	200	Φ7
FAHM-800	250A	630,700,800	AC690V	AC800V	275	210	115.5	70	243	Φ7

FEEO

FTS-63

Dual Power Transfer Switch (CB Class)

FTS Micro-Breaking Dual Power Transfer Switch (hereinafter referred to as transfer switch) is suitable for AC 50/60Hz dual power supoly system with rated operating voltage of 400V amd rated operating current form 16 ~ 63A. Optional transfer of dual power can be made according to requirement. The product owns short circuit, overload, under voltage and loss-of-voltage protection function, as well as fire protection, double-break and output ON signal function. It's especially suitable for lighting circuit of o□ce building, mall, bank, bus station and high-rise building requiring fire product complies with GB/T 14048.11 standard.

Working Conditions

- The ambient temperature shall not be higher than +40℃, or lower than -5℃, and the daily average shall not exceed +35℃.
- The altitude of installation site shall not exceed 2000m.
- Relative humidity shall not exceed 50% at the ambient temperature of +40℃, a higher humidity is allowable at a lower temperature, the average maxinmum relative is 90% in the wettest month at a monthly average minimum teperature of +25℃, and special measures shall be taken for the condensation on surface of product due to temperature change.
- Pollution calss: class III.
- In place of no intense vibration and impact, no harmful gas corrosive and disruptive to the insulation, no sever dust, no conducting microparticle and explosive substance, no high electromagnetic interference.

Product Featurres

- Reasonable structure, small volume, nice appearance, with provided with protective shield, safer and more reliable power supply.
- Complete protective fun ctions, including short circuit, overload, open phase and loss-of-voltage protection.
- Reliable remote double-break with EPS fire protectin power supply interface DC12-24V.
- Noiseless, energy saving, simple installation, easy operation, raliable and stable performance.

Product Performance

- The transfer switch is composed of two FER-63 Micro-Breaking and motor and mechanical rotating divice, and make detection to daul power through controller, when abnormality controller, when abnormality occurs to the circuit, the controller will make a logic judgment for the detection result and drive the operating mechanism to switch on or off according to according to command of controller, ensuring safe and reliable and stable performance.
- Rated short circuit breaking capacity: 3kA
- Rated short circuit making capacity: 3kA
- transfer time: ≤3S
- Control voltage of transfer switch: AC230V
- Mechanical life of transfer switch(transfer of normal and reserve power): 3000 times, electric life: 1500 times
- Rated insulation voltage: U=500V
- Rated working current: 10A,16A,20A,32A,40A,50A,63A
- The transfer switch has auto throw-in self-restoring function with the normal supply operating preferentially in common confition, the user shall negotiate with the manufacturer during order placing for any other special requirement such as transfer switch of auto throw-in nonself-restoring mode.

Specifications

Making and Breaking Capacity

Utilization Category	Making and Breaking Test Condition					
Utilization Category	I/Ie	U/Ue	CosΦ	Electrical time(s)	Duration of cycle(min)	Number of operating cycles
Ac-B33	6.0	1.05	0.5	0.05	≤5	12

Note: AC-B33 motor load or combined load inccluding motor and resistance load under infrequent operation condition

wiring diagram

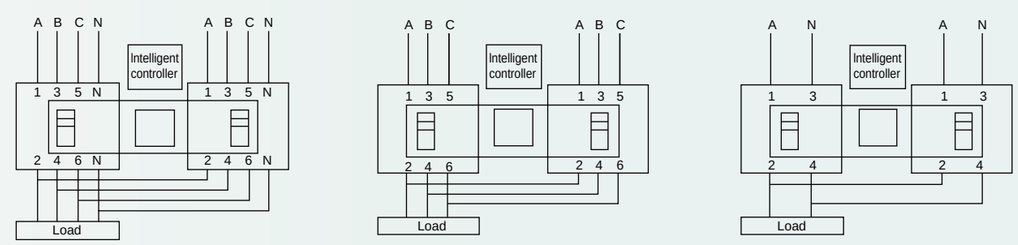

4-poles wiring diagram　　3-poles wiring diagram　　2-poles wiring diagram

FEEO

FNTS-125

Dual Power Automatic Transfer Switch

The dual power automatic switch is a newly developed miniature householdpower switch, which is mainly used to test whether the main power supply or standbypower supply is normal.When the normal power supply is abnormal, the standby power supply starts to work immediately, which ensures the continuity, reliability andsafety of power supply. This product is specially designed for household rail installation and is specially used for PZ30 distribution box.

Genera

- The dual power automatic switch is suitable for emergency power supply systemswith 50 or 60Hz and rated 400V AC. ATS has the characteristics of solid structure,reliable conversion, convenient installation and maintenance and long service life. It is widely used in various occasions where power failure cannot be sustained, and can be operated by electricity or manually. ATS is composed of TSE and controller.
- According to GB/T14048.11, Part 6-1: multifunctional equipment and switchgearis formulated. It can be seen that ATS is the most qualified low-voltage switchgearand control device.

Main technical parameters

Specification	125A		
Rated current Ie(A)	16, 20, 25	32, 40, 50, 63	80, 100, 125
Insulation voltage Ui	AC690V, 50Hz		
Rated voltage Ue	AC400V, 50Hz		
Classification	PC class: can be manufactured and withstood without short circuit current		
Utilization category	AC-33iB		

Main technical parameters

Pole No.	2P	3P	4P
Weight(kg)	1.7	2.1	2.6
Electrical	Life: 2000 times; Manual operation: 5000 times		
Rated short circuitcurrent Iq	50kA		
Short circuit protection device (fuse)	RT16-00-63A		
Rated impulsewithstand voltage	8kV		
Control circuit	Rated control voltage Us: AC220V/50HzNormal working conditions:85-110%Us		
Auxiliary circuit	2 relays, each with two sets of contact converter contact capacity: AC220V/50Hz Ie=5y		
Conversion time of contactor	<50ms		
Operation conversionl time	<50ms		
Return conversion time	<50ms		
Power off time	<50ms		

Wiring diagram

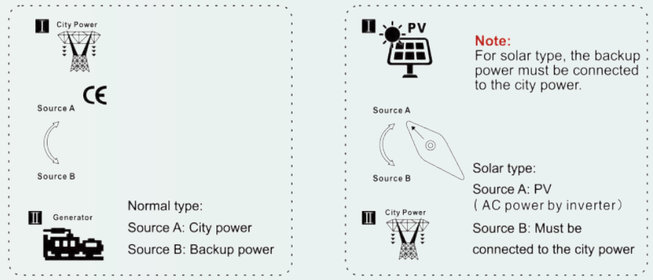

Wiring diagram

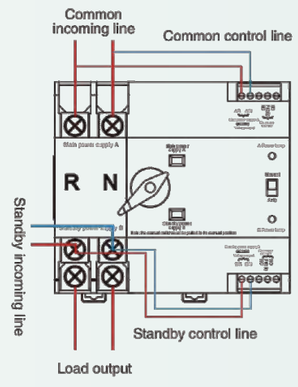

125/2P wiring diagram

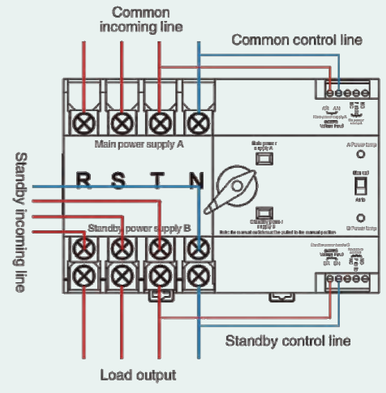

125/2P wiring diagram

Dimension

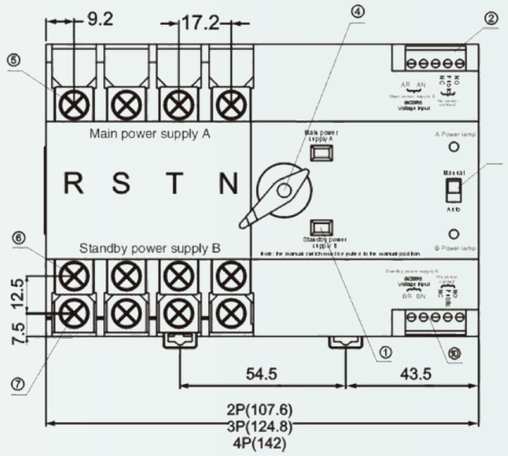

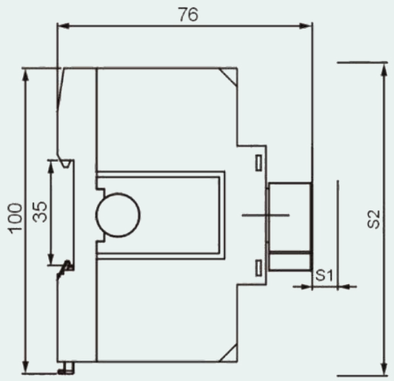

Safe distance: s1: ≥30mm S2: ≥203mm

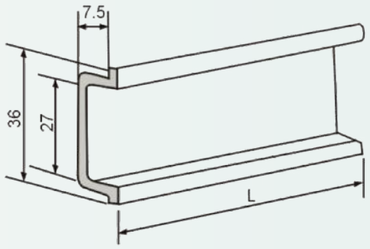

1、Status position indication
2、Main power terminal and passive signal(AC220V)
3、Manual / automatic switch
4、Manual handle
5、Main terminal of common power side
6、Main terminal of standby power side
7、Main terminal of load connection side
8、A power indicator
9、B power indicator
10、Standby power terminal and passive signal(AC220V)

FEEO

FTSM

Moulded Case Dual Power Transfer Switch(CB Class)

FTSM series automatic transfer switch are mainly composed of power conversion actuator, circuit breaker and controller. This dual power switch with automatic, manual, power indicator, normal switch indicator, ready switch indicator working state. Switch's features are small volume, long life, low power consumption, light weight, stable work, easy to use and so on.

Technical Date

Model	FTSM-63	FTSM-125	FTSM-250	FTSM-400	FTSM-630
Standard	GB/T 14048.11				
Electrical Characteristic Parameter					
Shell Frame Current	63A	125A	250A	400A	630A
Rated Current In (A)	10,16,20,25, 32,40,50,63	25,32,40,50, 63,80,100,125	100,125,140, 160,180,200, 225,250	225,250,315, 350,400	400,500,630
Rated Operating Voltage Ue	AC400V 50Hz				
Rated Insulation Voltage Ui	AC500V	AC800V	AC800V	AC800V	AC800V
Rated Impulse Withstand Voltage Uimp	6KV	8KV	8KV	8KV	8KV
Switching Poles	3P, 4P				
Life	6000	6000	6000	4000	3000
Use Category	AC-33iB				
Electrical Leve	CB Class				
Protection Level	IP30				

Technical Date

Control Characteristic Parameter					
Model	FTSM-63	FTSM-125	FTSM-250	FTSM-400	FTSM-630
Rated Control Supply Voltage Us	AC400V 50Hz				
Switching Time	≤3s	≤3s	≤3s	≤4s	≤4s

Installation

When installing wiring, normal power N should be access to normal power supply circuit breaker QN, ready power R should be access to ready power supply circuit breaker QR. When QN and QR is 4 poles circuit breaker, wiring mode according to the wiring diagram, which QN and QR's 1, 3, 5 are three-phase (A, B, C) into line terminals, 2, 4, 6 are three-phase outgoing line terminals, 7 is zero line (N) into line terminal, 8 is zero line outgoing line terminal. If the use of 3 poles circuit breaker, the normal power N's zero line (NN) and ready power R's zero line (NR) must be respectively received on 3 poles special connection zero line terminal. Specific see wiring diagram. Dual power transfer switch automatic controller's work power supply circuit breaker QN and QR's into line terminal A and zero line N, in the automatic power switch installation, wiring process, Do not let the local controller to forget to connect the signal line, touch off or short circuit and so on, otherwise can not work.

Main circuit wiring diagram

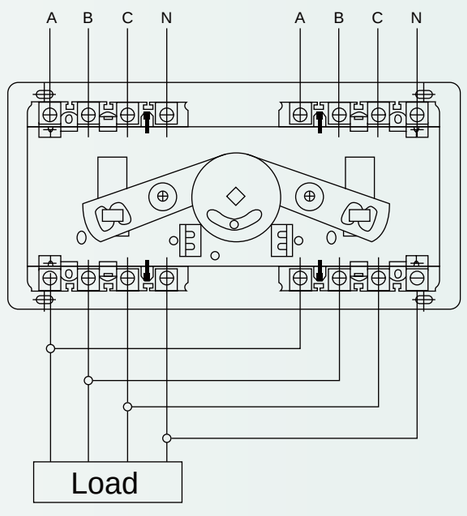

4-Poles wiring diagram

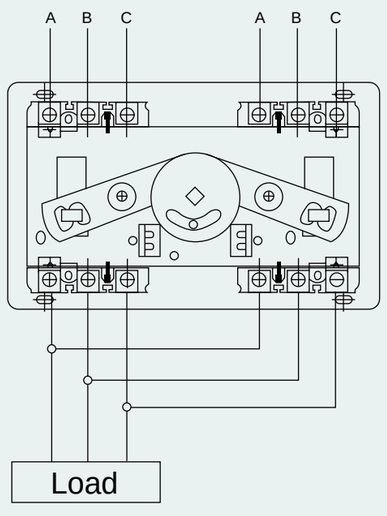

3-Poles wiring diagram

FEEO

FQTS-63

Dual Power Automatic Transfer Switch

The rail-mounted dual power conversion isolation switch has four functions of on, off, conversion and isolation. It can be freely switched on and off between two loads carried by a group of lines, or on two power sources. It is used for on-off and switching between, using DIN standard rail (35×7.5) installation, the shell is made of PA66 injection molding, with high flame retardant performance, it is an ideal product that needs to be used for switching and opening and closing in industrial equipment and circuits. The rated current of this product is 40A/63A, and it is convenient and safe to install and wire on the guide rail.

Name	Dual power automatic tanster switch
Pole NO.	1P,2P,3P,4P
Rated current	16A,20A,25A,32A,40A,50A,63A
Rated voltage	1P/2P: 230VAC 50/60H 3P/4P: 400VAC 50/60H
Rated insulation voltage	690VAC
Rated impulse withstand voltage	4KV
Working temperature	-20℃~+50℃
Storage Temperature	-40℃~+80℃

Dimensions

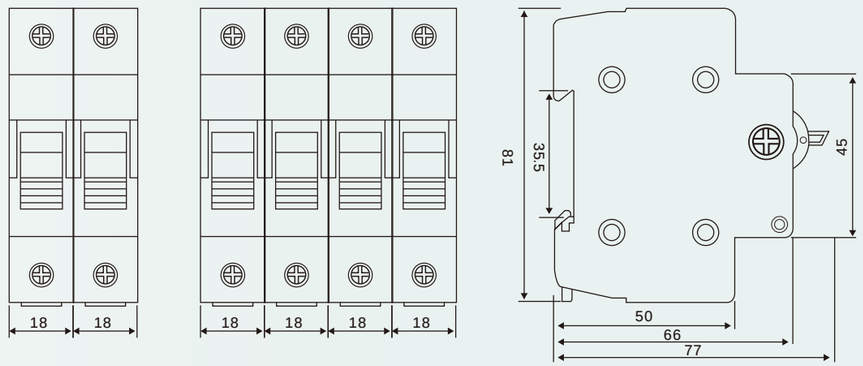

Wiring Diagram

1P	2P	3P	4P
	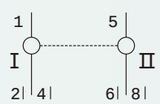	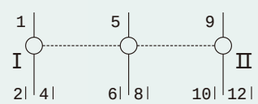	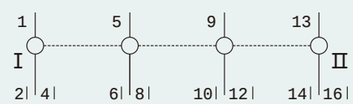

FEEO

FMC4

Solar Connector

- Simple on-site processing.
- Acomodates PV cable with different insulation diameters.
- Mating safety provided bykeyed housings.
- Multiple plugging and unplugging cycles .
- High current carrying capacity.

FMC4-1000 FMC4-1500

Technical Parameters

Rated Current	30A(2.5-6mm²)
Test Voltage	6000V(50Hz, 1min)
Rated Voltage	1000V DC
Overvoltage Type/Pollution Degree	CAT III /2
Contact Resistance Of Plug Connector	ImΩ
Contact Materia	Copper, Tin-plated
Insulation Material	PPO
Degree Of Protection	IP2X / IP67
Flame Class	UL94-VO
Safety Class	II
Suitable Cable	OD 4.5-8.5 (2.5-6.0mm2)
Insertion Force/Withdrawal Force	≤ 50N / ≥ 50N
Connecting System	Crimp connection
Temperature Range	-40℃ ~ +125℃

FEEO

FMC4

Solar Branch Connector

- Plug FMC4B-2M1F
- Socket FMC4B-2F1M

FMC4B FMC4Y

Specifications

Type And Meaning	
Available Branch Type	2-1, 3-1, 4-1, 5-1
Rated Current	30A
Rated Voltage	1000V DC
Test Voltage	6000V(50Hz, 1min)
Overvoltage Category/Pollution Degree	CAT III /2
Contact Resistance Of Plug Connector	Im Ω
Contact Materia	Copper, Tin-plated
Insulation Material	PA/PRO
Degree Of Protection	IP20/IP67
Flame Class	UL94-VO
Safety Class	II
Insertion Force	≤ 50N
Withdrawal Force	≥ 50N
Temperature Range	-40℃ ~ +110℃

FEEO

FMC4H

Solar Fuse Connector

A range of 10x38mm fuse links specifically designed for protecting photovoltaic strings. These fuse links are capable of interrupting low overcurrents associated with faulted photovoltaic string arrays (reverse current, multi-array fault).

- Solar PV Fuse Holder, DC 1000V,up to 30A fuse.
- IP67,10x38mm Fuse Copper.
- Suitable connector is MC4 Connector.

Specifications

Technical Data	
Rated Current	30A (According to the FUSE)
Rated Voltage	1000V DC
Test Voltage	6000V (50Hz, 1min)
Overvoltage Category/Pollution Degree	CAT III /2
Contact Resistance Of Plug Connector	Im Ω
Contact Materia	Copper, Ag plated
Insulation Materia	PPO
Degree Of Protection	IP20/IP67
Flame Class	UL94-VO
Safety Class	II
Insertion Force/ Withdrawal Force	≤ 50N/≥ 50N
Connecting System	Crimp connection
Temperature Range	-40℃ ~ +125℃

FEEO

FMC4D

Solar Diode Connector

- The diode series connectors.
- Low power loss.
- Auto-lock equipment of male and female points enable connection more easy and reliable.
- With the capacity of anti-aging and resistance to ultraviolet radiation on the outer cover.
- Popular figure suit most of field installation.
- Simple on-site processing.
- With convenient installation,strong commonality

Specifications

Technical Data	
Insulation Material	PPO
Contact Materia	Copper, Tin plated
Adapting Current	10A
Rated Voltage	1000V(TUV), 600V(UL)
Test Voltage	8000V(TUV50Hz, 1min)
Contact Resistance	<0.5mΩ
Degree Of Protection	IP67
Ambient Temperature Range	-40℃ ~ +85℃
Flame Class	EN62852
Safety Class II	II
Pin Dimensions	Φ4mm

FEEO

PV Cable

- Dual wall insulation, electron beam cross-linked.
- Excellent resistance to UV, water, ozone, fluids, salt, general
- weathering.
- Excellent resistance to abrasion.
- Halogen free, flame retardant, low toxicity.
- Excellent flexibility and stripping performance.
- High current carrying capacity.

Specifications

Type	Cross Section mm²	Strand Design No.×φ(mm)	Conductor Diameter mm	Conductor Resistance Ω/km	Outer Diameter A×B mm	Rated Voltage VAC/DC	Rated Current A
Single Core							
PV-1×1.5mm²	1.5	30×φ0.25	1.6	13.9	4.5	1000/1800	20
PV-1×2.5mm²	2.5	50×φ0.25	2.0	8.06	5.3	1000/1800	30
PV-1×4.0mm²	4.0	56×φ0.3	2.6	4.97	6.4	1000/1800	50
PV-1×6.0mm²	6.0	84×φ0.3	3.3	3.52	7.2	1000/1800	70
PV-1×10.0mm²	10.0	200×φ0.25	4.4	2.12	8.3	1000/1800	95
Twin Core							
PV-2×1.5mm²	1.5	30×φ0.25	1.6	13.9	5.8×9.3	1000/1800	20
PV-2×2.5mm²	2.5	50×φ0.25	2.0	8.06	6.2×9.9	1000/1800	30
PV-2×4.0mm²	4.0	56×φ0.3	2.6	4.97	6.9×11.3	1000/1800	50
PV-2×6.0mm²	6.0	81×φ0.3	3.3	3.52	7.1×14.3	1000/1800	70

Specifications

Wire	Class 5, tinned
Insulation Materia	XLPE
Double Insulated	
Halogen-free	
High resistance against oils, greases, oxygen	
and ozone	
Microbe-resistant	
UV Resistant	
High Wear And Abrasion Resistance	
Flam Test According To	DIN EN 50265-2-1 UL1571(VW-1)
Smallest Permissible Bending Radius	5XD
Temperature Range	-40℃ ~ +90℃
Colours	Black/red

Dimension

Single Core

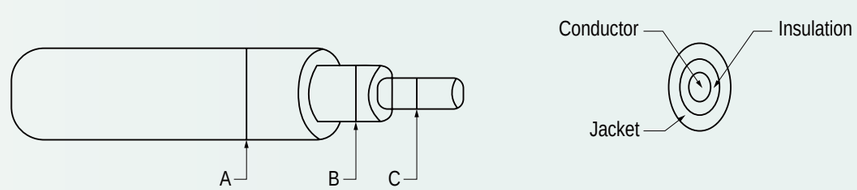

Twin Core

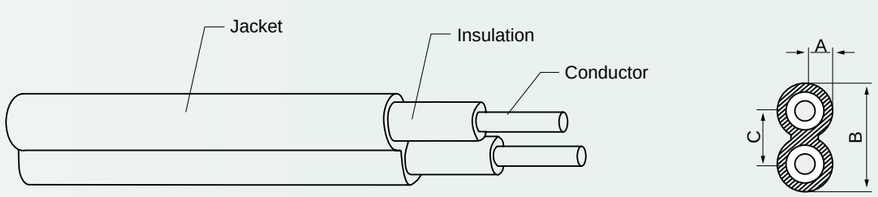

FEEO

FSCB-PV
FSAB-PV

Combiner Box

Technical Parameters

Input string	2/4/6/8/10/12/16/20		
Electric parameter			
System maimum DC voltage	550	1000	1500
Maximum input current for each string	standard		
Maximum input strings	standard		
Maximum output switch current	standard		
Number of inverter	N		
Number of output strings	standard		
Lightning protection			
Category of test	II grade protection		
Nominal discharge current	20kA		
Maximum discharge current	40kA		
Voltage protection leve	3.8KV		
Maximum continuous operating voltage Uc	1050V		
Poles	2P/3P		
Structure characteristic	Plug-push module		

Technical Parameters

System	
Protection grade	IP65
Output switch	DC isolation switch (optianal)/DC circuit breaker (standard)
SMC4 Waterproof Connectors	Standard
PV DC FUSE	Standard
Pv Surger protective device	Standard
Monitoring module	Optional
Precenting diode	Optional
Box material	PC
Installation method	Wall mounting type
Operating Temperature	-25℃ ~ +55℃
Elevation of Temperature	2km
Permissible relative humidity	0-95%,no condensation
Mechanical parameter	
DC combiner box can be customized	

FEEO

FRP

Rapid Shutdown Switch

- Shutdown while ambienttemperature is over 85° C
- Slim size matchmodule perfectly
- Flame retardantrating: UL94-V0
- Protection Level: IP68
- Standards compliant: UL1741/NEC 017690.12

Specifications

Standard	Data
Maximum Allowed Input Voltage	80V
Maximun Output Voltage	80V
Number of connectable panels	1/2
Maximum input current	15A/25A
Maximum short circuit current	15A/25A
Maximum system voltage	1000V(1500 optional)
Operating temperature	Negative 30-80℃ (automatically shut down if over 85℃)
Operating environment temperature	Negative 30℃ ~ +55℃
Supply voltage	PV panels
Humidity	0% ~ 90% at 20℃
Interface	MC4
Warranty	10 Years
Panel cable length	280±10mm
String cable length	1280±10mm
Communication	PLC

Product details

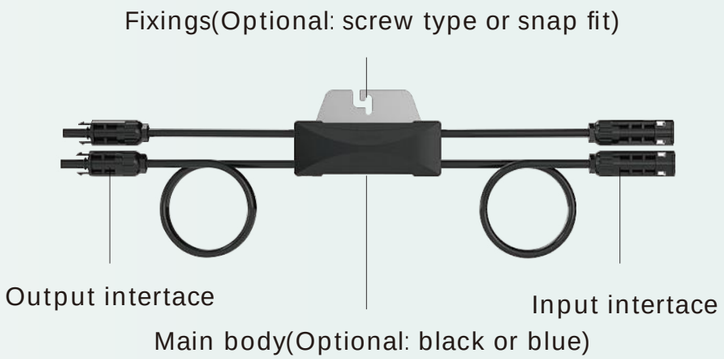

Dimensions

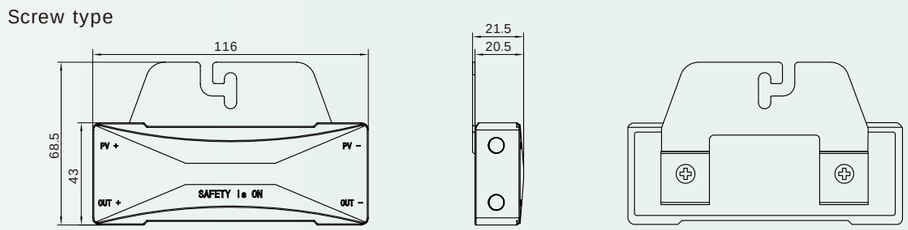

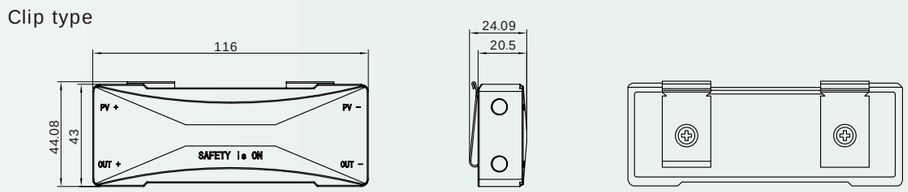

FEEO

FRS-1/2

DC RAPID SHUTDOWN SWITCH

- Max shut down one or two strings modules
- Maximum circuit current 55A
- Maximum cricuit voltage 1500vdc
- PC+ABS material, IP66 protection grade
- Multi clock interface type optional (knockout hole/gland/ MC4 terminal)
- Waterproof Vent valve to avoid condensation inside the shell
- Advanced temperature sensor is used to detect the highest temperature in the shell in real time temperature, when the internal temperature exceeds 70 degrees, automatic cut-off switch
- It is suitable for residential, industrial and commercial photovoltaic systems

Specifications

Standard	Data
String voltage (VDC)	300~1500
String current(A)	9~55
Circuit	1/2
Connection mode of Isolation switch	2/4/4B
Working voltage	100Vac - 270Vac
Rated voltage	230Vac
Rated current	30mA
Starting (loading) current	100mA(AVG)
Action current	300mA(Max)
Contact action condition	24Vdc-300mA(Max)
Operating temperature	-20° C ± 50° C
Maximum temperature before automatic shutdown	≥ 70° C
Storage temperature	-40° C ± 85° C

Specifications

Standard	Data
Protection level	IP66
Over current protection	II
Authentication	CE
The DC isolation switch meets the standard	EN 60947-1&3
Mechanicallife	10000
Number of loaded operations (PV1)	>1500

Specifications

Model	Circuit	Pole number	Data of ERS refer to built-in DC isolators Data according to IEC60947-3(ed.3.2):2015,UL5081.Utilization category DC-PV1.				
			600V	800V	1000V	1200V	1500V
SRS13-2	1	2	32	26	13	10	5
SRS20-2	1	2	40	30	20	12	6
SRS25-2	1	2	55	40	25	15	8
SRS40-2	1	2	/	50	40	30	20
SRS50-2	1	2	/	55	50	40	30
SRS13-4	2	4	32	26	13	10	5
SRS20-4	2	4	40	30	20	12	6
SRS25-4	2	4	55	40	25	15	8
SRS40-4	2	4	/	50	40	30	20
SRS50-4	2	4	/	55	50	40	30
SRS13-4B	1	4	32	26	13	10	5
SRS20-4B	1	4	40	40	40	30	20
SRS25-4B	1	4	/	/	55	40	30
SRS40-4B	1	4	/	/	/	/	45
SRS50-4B	1	4	/	/	/	/	50

Wiring diagram

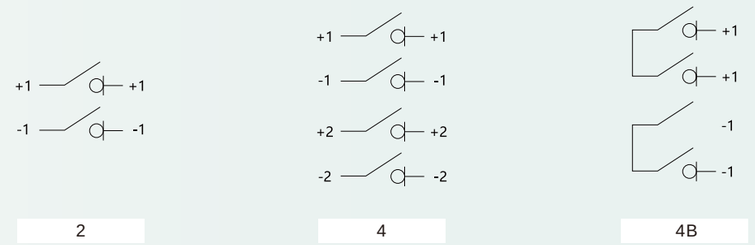

Wiring diagram

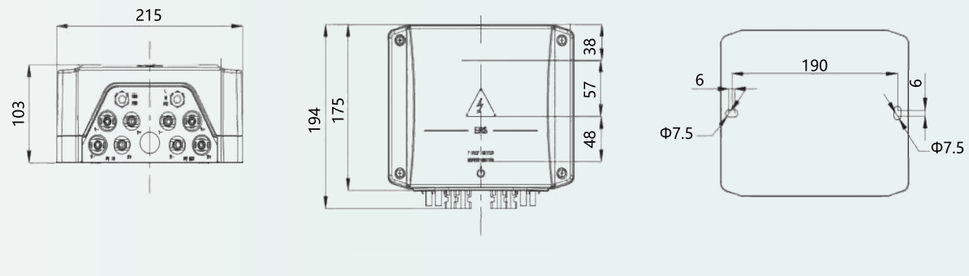

FEEO

FRS-3/4/5

DC RAPID SHUTDOWN SWITCH

- Suitable for 3-string, 4-string, 5-string modules
- Maximum circuit current 55A
- Maximum cricuit voltage 150Ovdc
- Sheet metal material, IP66 protection grade
- Multi clock interface type optional (knockout hole/gland/ MC4 terminal)
- Waterproof Vent valve to avoid condensation inside the shell
- Advanced temperature sensor is used to detect the highest temperature in the shell in real time temperature,when the internal temperature exceeds 70 degrees, automatic cut-off switch
- It is suitable for residential, industrial and commercial photovoltaic system

Specifications

Standard	Data
String voltage (VDC)	300~1500
String current(A)	9~55
Circuit	3/4/5
Connection mode of Isolation switch	6/8
Working voltage	100Vac - 270Vac
Rated voltage	230Vac
Rated current	30mA
Starting (loading) current	100mA(AVG)
Action current	300mA(Max)
Contact action condition	24Vdc-300mA(Max)
Operating temperature	-20° C ± 50° C
Maximum temperature before automatic shutdown	≥ 70° C
Storage temperature	-40° C ± 85° C

Specifications

Standard	Data
Protection level	IP66
Over current protection	II
Authentication	CE
The DC isolation switch meets the standard	EN 60947-1&3
Mechanicallife	10000
Number of loaded operations (PV1)	>1500

Specifications

Model	Circuit	Pole number	Data of ERS refer to built-in DC isolators Data according to IEC60947-3(ed.3.2):2015,UL5081.Utilization category DC-PV1.				
			600V	800V	1000V	1200V	1500V
SRS13-6	3	6	32	26	13	10	5
SRS20-6	3	6	40	30	20	12	6
SRS25-6	3	6	55	40	25	15	8
SRS40-6	3	6	/	50	40	30	20
SRS50-6	3	6	/	55	50	40	30
SRS13-8	4	8	32	26	13	10	5
SRS20-8	4	8	40	30	20	12	6
SRS25-8	4	8	55	40	25	15	8
SRS40-8	4	8	/	50	40	30	20
SRS50-8	4	8	/	55	50	40	30

Wiring diagram

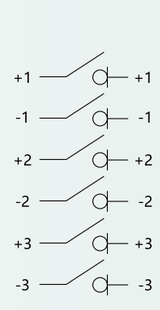

6

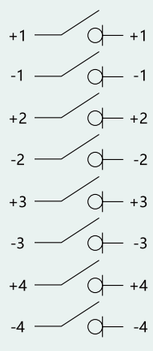

8

FEEO

FHT/FHVB

Distribution Box

FHT /FHVB series distribution box use high-quality fire-resistant and ABS materials reach IP65 protection Degree the max current can be 125A.
Can be used in outdoor environment to protect the heavy weather.

Flammability rating: HB Flammability rating: V-2

Specifications

Model No	Product Size(mm)	Product Weight(kg)
FHT-5WAY	120*160*95	0.34
FHT-8WAY	200*155*95	0.53
FHT-12WAY	250*195*110	0.84
FHT-15WAY	310*195*110	0.90
FHT-18WAY	365*195*110	1.07
FHT-24WAY	360*280*110	1.35
Model No	Product Size(mm)	
FHVB-4WAY	107*212*82	0.76
FHVB-9WAY	165*200*100	0.81
FHVB-12WAY	219*200*100	1.08
FHVB-15WAY	273*230*110	1.28
FHVB-18WAY	381*230*110	1.34
FHVB-24WAY	273*380*110	1.91
FHVB-36WAY	381*380*110	2.40

FEEO

Solar Tools Kit

- 1 PCS A-2546B terminal crimping pliers (crimping range: 2.5-6mm2 , included a locator)
- 1 PCS W X-0626 cable stripper (stripping range: 0.9-6mm2)
- One pair MC4 wrench, one pair MC4 connector
- MC3 and 30J head each pair

Main Speciality

- The new PV Crimping Pliers precision pressure line module locking (self locking and releasing mechanism) and the overall design;
- In the the repeated pressure line to maintain a higher standard of quality pressure line;
- The excellent lever transmission design, isobar larger cross-section of the wire, the m ore labor-saving;
- Ergonomic design;
- The positioning device can be fixed in the jaw , to ensure precise positioning of the terminal of the pressure line;
- Pressure line film and locator under the pressure line terminal selected.

Type	Capacity	AWG	Length	Weight
A-2546B(MC4)	2.5/4.0/6.0mm2	14-10AWG	270mm	0.74kg
A-2546B-4(MC3)	2.5/4.0/6.0mm2	14-10AWG	270mm	0.74kg
A-2546B-3	4.0/6.0mm2	12-10AWG	270mm	0.74kg